ENGINEERING MECHANICS AND DRAWING

(Electrical Machines and Appliances)
Theory - II

VOCATIONAL EDUCATION
Higher Secondary - First Year

A Publication under
Government of Tamilnadu
Distribution of Free Textbook Programme
(NOT FOR SALE)

Untouchability is a Sin
Untouchability is a Crime
Untouchability is Inhuman

**TAMILNADU
TEXTBOOK CORPORATION**
College Road, Chennai - 600 006.

© Government of Tamilnadu
First Edition - 2010

CHAIRPERSON

Mr. K. GOVINDASAMY
Senior Lecturer / Electrical
Bhakthavatsalam Polytechnic College,
Kanchipuram - 631 552

AUTHORS

Mr. R. Balamurugan
Vocational Instructor
Govt. Model Hr. Sec. School
Saidapet, Chennai - 15.

Mr. A. Ramesh
Vocational Instructor
Govt. Model Hr. Sec. School
Saidapet, Chennai - 15.

Mr. V.V. Shanmugadoss
Vocational Teacher
Govt. Hr. Sec. School
Perunagar
Kanchipuram - 603 404

Mr. P. Muthusamy
Vocational Instructor
Govt. Boys Hr. Sec. School
Namakkal South
Namakkal

Mr. Kasinathan
Vocational Instructor
General Kariappa Hr. Sec. School
Saligramam
Chennai - 600 093

This book has been prepared by The Directorate of School Education on behalf of the Government of Tamilnadu

This book has been printed on 60 GSM Paper

Printed by Offset at:

HIGHER SECONDARY - VOCATIONAL COURSE

ELECTRICAL MACHINES AND APPLIANCES

Syllabus for XI Standard

Theory II (ENGINEERING MECHANICS AND DRAWING)

1. PROPERTIES OF ENGINEERING MATERIALS

Introduction – properties of materials.

2. FEROUS METAL

Iron – Types of iron – pig iron – cast iron – types - wrought iron – properties – uses.

3. NON FERROUS METAL

Copper – Aluminium – Tin – Bronze – Brass – Tungsten – properties – uses.

4. NON METAL MATERIALS

Types of plastics – properties – uses – rubber – glass – properties – uses.

5. FORCE

Types of forces – stress – strain – types of stress.

6. ELASTICITY

Elastic limit – Hook's law – young's modulus – testing of tension – stress and strain relationship.

7. BENDING FORCE AND DEFLECTION

Bending force – Deflection – Moment of inertia and radius of gyration – strength of electric poles or pillars – Types of electric poles – properties – stay wire – support pole – stay wire and support pole.

8. SPRING

Types of spring – Laminated spring – Helical spring – Flat spiral spring.

BEARINGS

Types of bearings – fitting of bearing and removing of bearing – uses – lubrication – lubrication types.

9. TRANSMISSION OF POWER

Introduction – methods of transmission of power – individual drive – Group drive.

10. METHODS OF CABLE JOINTS IN ELECTRIC CIRCUIT

Cable joints – methods of cable joints - method of soldering – method of bracing.

ENGINEERING DRAWING

1. DRAWING AND IMPORTANT OF DRAWING

Instruments used to draw the drawing and uses – free hand sketch – Line – Types of lines.

2. GEOMETRICAL DRAWING

Line – Line segment - division of a line segment in to the equal parts – Drawing of angle without protector – Triangle – Rectangle – Pentagon – hexagon – Heptagon – Octagon – drawing a square inscribed in a circle - drawing a circle inscribed in a square – parabola – hyperbola.

3. Orthographic Projection

Plan – Elevation - side view – Isometric view.

4. AC AND DC MOTOR STARTERS

AC MOTORS STARTER

1) D.O.L. Starter
2) Star / Delta starter
3) Auto Transformer starter
4) Slip ring (or) Rotor resistance starter.

DC MOTOR STARTER

1) Three Point starter
2) Four point Starter

5. ELECTRICAL SYMBOLS

PREFACE

This book presents simple, explicit and easy for learning at the begining level for the subject on **Engineering Mechanics and Drawing** considerable emphasis is laid on the fundamentals physical concepts, principles and functions of various elements.

The Government of Tamilnadu is deciding to revamp Vocational Education in Higher Secondary Student to make them easy to understand higher studies in engineering faculty.

The Higher Secondary Vocational Students and the beginers on this subject can easily able to understand the Principles and Concepts. Much care is taken to explain all the details with neat diagram and sketches. All the topics of this book is self illustrative. The students at the begining level will learn this book with much interest themselves, because such care is taken while preparation of this book.

We, my self and my co-authors are profoundly feel proud and happiness in presenting all the need fulfactor in a very simple book form.

I personally thank all for giving me this best opportunity to bring out a best book for benefit of the Vocational Students. All the readers of this book will enrich knowledge on **Engineering Mechanics and Drawing** which makes us feel proud and happy.

Thiru. K. Govindasamy
Chairperson

ENGINEERING MECHANICS

CONTENT

Sl.No.		Page No.
1.	Properties of Engineerign Materials	1
2.	Ferrous Metal	7
3.	Non Ferous Metal	16
4.	Non Metal Materials	23
5.	Force	27
6.	Elasticity	30
7.	Bending force and deflection	35
8.	Spring and Bearing	43
9.	Transmission of power	54
10.	Methods of Cable joints in electric circuit	60

ENGINEERING DRAWING

CONTENT

Sl.No.		Page No.
1.	Drawing and Important of drawing	77
2.	Geometrical drawing	88
3.	Orthographic projection	104
4.	AC and DC Motor Starters	134
5.	Electrical Symbols	140

1. PROPERTIES OF MATERIALS

1.0. INTRODUCTION

The Term 'property' in a broader sense, may be defined as the quality, which defines the specific characteristics of a metal. A detailed study of all the properties of a metal provides a sound basis for predicting its behavior in manufacturing shop and also in actual use. As a matter of fact, the following properties of a metal are important for an engineer, to enable him in selecting suitable metals for his various jobs.

1. Physical properties

These include shape, size, color, luster, specific gravity, porosity, structure, finish etc.

2. Mechanical properties

These include elasticity, plasticity, ductility, brittleness, hardness, toughness, stiffness, resilience, creep, strength, malleability, Machinability etc.,

3. Thermal properties

These include specific neat, thermal conductivity thermal expansion, latest heat, thermal stresses, thermal shock etc.

4. Electrical properties

These include conductivity, resistivity, relative, capacity, dielectric strength etc.

5. Magnetic properties

These include magnetic and non magnetic etc.,

6. Chemical properties

These include atomic weight, equivalent weight, molecule weight, acidity, chemical composition, corrosion etc.

7. Mechanical properties

The mechanical properties of a metal are those properties whih completely define its behavior under the action of external loads or forces.

1.1 i) ELASTICITY

The term 'Elasticity' may be defined as the property of a metal by virfue of which it is able to retain its original shape and size after the removal of the load.

The elasticity is always desirable in metal used in machine tools and other structural members.

ii) Plasticity

The term 'Plasticity' may be defined as the property of metal by virtue of which a permanent deformation takes place, when ever it is subjected to the action of external for us.

The plasticity of a metal depends upon its nature and the environmental conditions.

This property finds its use in forming, shaping and extruding operations of metal.

iii) Ductility

The term 'Ductility' may be defined as the property of a metal by virtue of which it can be drawn into wires or elongated before rupture takes place. It depends upon the grain size of the metal crystals.

The measues of the ductility of a metal are its percentage elongation and percentage reduction in the cross sectional area before rupture.

iv) Brittleness

The termx Brittleness' may be defined as the property of a metal by virtue of which it will fracture without any appreciable deformation.

This property is opposite to the ductility of a metal. Cast Iron and class are the example of brittle materials.

This property finds its importance for the design of machine tools, which are subject to sudden loads.

v) Hardness

The term v Hardness' may be defined as the property of a metal by virtue of which it is able to resist abrasion, indentation and scratching by harder bodies. It is measured by the resistance of the metal which it offers to scratching.

vi) Touch Ness

The term ' Toughness' may be defined as the property of a metal by virtue of which it can absob maximum energy before fracture takes place. Tenacity and Hardness of a metal are the measures of its toughness.

The importance of toughness is in the selection of a material where the load increases beyond the elastic limit.

vii) Stiffness

The term ' Stiffness' may be defined as the property of a metal by virtue of which it resists deformation.

The stiffness of a metal is of importance while selecting it for a member or a component of a machine. The stiffness of a metal is also made use in graduating spring balances and spring controlled measuring instruments.

viii) Resilience

The term 'Resilience' may be defined as the property of a metal by virtue of which it stores energy and resists shocks or impacts.

The resilience of a metal is of great importance in the selection of materials used for various types of spring.

ix) Greep

The Term 'Creep' may be defied as the property of a metal by virtue of which it deforms continuously under a steady load. Generally, the creep occurs in steel at higher temperature. Creep is always considered while designing IC engines, boilers, turbines etc.

x) Strength

The term' Strength' may be defined as the property of a metal by virtue of which it can with stands an external force or load without rupture.

The strength of a metal is the most important property which plays a decisive role in designing various structures and components.

xi) Malleability

The term 'Malleability' may be defined as the property of a metal by virtue of which it can be deformed into thin sheets by rolling or hammering without rupture. It depends upon the crystal structure of the metal.

xii) Machinability

The term 'Machinability' may be defined as the property of a metal which indicates the ease with which it can be cut or removed by cutting tools in various machining operations such as turning, drilling, boring milling etc.

The machinability of a metal depends upon the mechanical and physical properties of the metal, chemical composition of the metal microstructure of the metal and the cutting conditions.

xiii) Ductility

The term percentage of Elongation is the maximum increase in the length expressed as percentage of original length.

$$\text{Percentage elongation} = \frac{\text{Increase in length}}{\text{Original length}} \times 100$$

The term percentage reduction of cross sectional area is the maximum decrease in cross - sectional area, expressed as the percentage of the original cross - sectional area.

$$\text{Percentage reduction in cross sectional area} = \frac{\text{Decrease in cross - sectional area}}{\text{Original cross sectional area}} \times 100$$

Questions

Part A

I. Choose the correct answers

1. One of the Physical properties of material is ....

   a) Latent heat b) Porocity c) Elasticity d) Acidity.

2. Structure is one of the .... properties of material

   a) Physical b) Mechanical c)Chemical d) Magnetic.

3. Shape, Size are belongs to which type of proporties of materials?

   a) Thermal b) Magnetic c) Physical d) Chemical

4. Elasticity is one of the .... properties of material

   a) Electrical b) Mechanical c) Chemical d) Physical.

5. Plasticity is belongs to which kind of proporties of material?

   a) Magnetic b) Electrical c) Mechanical d) Chemical

6. Ductility is one of the .... properties of material.

   a) Mechanical b) Chemical c) Electrical d) Magnetic.

7. Brittleness is belongs to which kind of properties of material?

   a) Chemical b) Electrical c) Magnetic d) Mechanical.

8. Hardness is one of the .... properties of material.

   a) Physical b) Mechanical c) Magnetic d) Electrical.

9. Toughness is belongs to which kind of properties of material?

   a) Electrical b) Magnetic c) Mechanical d) Physical.

10. Stiffness is one of the .... properties of material.

    a) Magnetic b) Physical c) Electrical d) Mechanical

11. Resilience is one of the .... properties of material.

    a) Mechanical b) Electrical c) Physical d) Magnetic.

12. Creep is belongs to which type of properties of material?

a) Chemical b) Mechanical c) Electrical d) Physical.

13. Strength is one of the .... properties of material.

a) Electrical b) Magnetic c) Mechanical d) Physical.

14. Malleability is one of the .... properties of material

a) Magnetic b) Physical c) Chemical d) Mechanical.

15. Machinability is one of the .... properties of material.

a) Mechanical b) Electrical c) Magnetic d) Physical.

16. One of the thermal properties of material is ....

a) Elasticity b) Specific heat c) Electrical conductivity d) Acidity

17 .... is one of the thermal properties of material

a) Hardness b) Porocity c) Atomic weight d) Thermal conductivity

18. One of the thermal properties of materials is ....

a) Thermal expansion b) Creep c) Size d) Electrical resistivity

19. One of the thermal properties of material is ....

a) Stiffness b) Latent heat c) Colour d) Relative Capacity

20. One of the thermal properties of material is ....

a) Acidity b) Magnetic c) Thermal Stress d) Electrical Conductivity

21. One of the Electrical properties of material is ....

a) Electrical resistivity b) Acidity c) Porocity d) Thermal Shock

22. .... is one of the Electrical properties of material

a) Atomic weight b) Electrical conductivity c) Strength d) Thermal expansion

23. One of the Mechanical properties of material is ....

a) Non-magnetic b) Thermal Conductivity c) Stiffness d) Electrical resistivity

24. One of the Chemical proportics of material is ....

a) Brittleness b) Corrosion c) Latent beat d) Shape

25. One of the Chemical proporties of material is ....

a) Atomic Weight b) Elasticity c) Electrical conductivity d) Non magnetic.

Part - B

II. Answer the following questions in one word

26. Properties of material can be divided into How many groups?
27. Write any two physical properties of material.
28. Write any two mechanical properties of material.
29. Write any two thermal properties of material.
30. Write any two magnetic properties of material.
31. Write any two Chemical properties of material.
32. Write any two Electrical properties of material.
33. Write any two brittle materials.

Part - C

III. Answer the following questions in briefly

34. Write the types of properties of material.
35. Write the physical properties of material.
36. What is meant by mechanical properties of material?
37. Write the mechanical properties of material.
38. Write the thermal properties of material.
39. Write the Electrical properties of material.
40. Write the chemical properties of material.

Part - D

IV. Answer the following questions in one page level

41. Describe any five mechanical properties of material.

Part - E

V. Answer the following questions in two page level

42. Explain the mechanical properties of material.

2. FERROUS METALS INTRODUCTION

2.0 INTRODUCTION

Metals and non metals materials play an important role in the engineering industry, because the process of all manufacturing starts with the raw material. The material mainly used in practice, are metal which may be broadly divided into the following groups.

2.1. (1). Ferrous Metal

The metals which contain iron as their main constituent, are called ferrous metal. Pig iron cost iron,. Wrought iron and steel are examples of ferrous metals.

2. Non-Ferrous Metal

The metal which contain a metal other than iron as their main constituent are called Non-ferrous metal.

Copper, Aluminum, Zinc, Lead and Tin are examples of non-ferrous metals.

3. Alloy Metal

Some of the metals are added in sufficient quantity in order to obtain special properties is know as Alloy metal.

Brass, Bonze, stainless steel and nichrome are examples if Alloy metal.

Ferrous Metal

Ferrous metals are those which contain iron as their main constituent. The ferrous metals are extensively used in engineering industry due to the following characteristics.

- Ease of fabrication process like casting, rolling, welding and machining.
- Resistance to corrosion.
- Magnetic properties and
- Weight.

2.2. IRON

Iron ores are basically carbonates, oxides and hydrates. The following are the important raw material of Iron.

1. Haematite [$Fe_2 O_3$]
2. Magnetite [$Fe_3 O_4$]
3. Limonite [$2Fe_2 O_3, 3H_2O$]
4. Siderite [$Fe CO_3$]

The most abundant ore is Hematite. Indians had specialized in the metallurgy of Iron and manufacture of steel. Ashok's Pillar in Delhi and the Iron joints used in the temple of puri, made of stainless steel, as they speak of the glory of our skill in this art.

2.2.1. Types of Iron

1. Pig Iron
2. Cast Iron
3. Wrought Iron
4. Steel

2.2.2. Pigiron

The basic raw materials required for the manufacture of pig-iron are iron ore, Coke and lime stone. From the above raw materials pig iron is extracted in a blast furnace. All ferrous metal are derived from Pig - iron.

The appropriate composition of pig iron is 3.00 to 4.20% Carbon. 0.50 -1.00% Silicon, 0.10-0.50% Manganese 0.02 - 0.07% sulphar, 0.20 - 0.30% phosphorus balance ferrous.

Pig iron being weak and brittle cannot be used as such for any structural purposes.

2.2.3. Cast Iron

Solid Pig iron on re-melting in a vertical furnace, heated by coke and known as cupola, can be cast o poured into moulds. Hence after re-melting it is known as Cast iron.

2.2.4. Properties of Cast Iron

1. Cast Ion contains 2% to 4.5% of carbon, small amount of silicon, Sulphur, manganese and phosphorus.
2. It is very hard but brittle material
3. Low cost
4. Good casting characteristics
5. It has wear resistance
6. It has high compressive strength and less tensile strength
7. Excellent machinability.
8. It has no ductility.
9. It cannot be welded
10. It has more weight

2.2.5. Types of Cast Iron

The following are the important type of cast iron.

1. Grey Cast Iron
2. White Cast Iron
3. Chilled Cast Iron
4. Malleable Cast Iron
5. Nodular Cast Iron
6. Alloy Cast Iron

2.2.6. Grey Cast Iron

Grey Cast Iron consists of Carbon 3 to 3.5% silicon 1 to 2.75%, Manganese 0.4 to 1 %, Phosphorous 0.15 to 1%, Sulphur 0.02 to 0.15% and remaining is iron. The Grey color is due to the fact that the Carbon is present in the form of free graphite.

- It has high damping capacity
- It has a low tensile Strength
- It has high compressive strength and ductility
- It has good wear resistance.
- It can be machined.

A very good property of grew cast iron is that free graphite in its structure act as lubricant. Due to this reason it is very suitable for these parts where sliding action is desired.

The grey cast iron castings are widely used machine tool bodies, automobile cylinder, blocks pipes and pipe fittings and agricultural implements, brake shoes, machine beds, lathe beds etc.

2.2.7. White Cast Iron

It is a particular variety of cast iron which shows a white fracture. White cast iron consists of carbon 2 - 2.3%, Silicon 0.85 - 1.2% manganese 0.1 - 0.4%, Phosphorus 0.05 - 0.2%, Sulphur 0.12 - 0.35% and remaining is iron.

It has a high tensile strength and low compression strength. It is hard, therefore it cannot be machined.

The white cast iron is used as a raw material in the production of malleable cast iron and wrought iron.

2.2.8. Chilled Cast Iron

It is a white cast iron produced by quick cooling of molten iron. The quick cooling is generally called chilling. The iron so produced is known as chilled iron. When the molten metal comes in contact

with the chill, its heat is rapidly conducted away and the hard surface is formed. Chills are used on any faces of a casting which are required to be hard to with stand wear and friction.

The process of chilling is used in the casting of rolls for crushing grains and jaw cruses plates. The running surface of rail carriage wheels is also chilled.

2.2.9. Malleable Cast Iron

The malleable cast iron is obtained from white cast iron by a suitable heat treatment process called annealing. The annealing process separates the combined carbon of the white cast iron into nodules of free graphite.

The malleable cast iron is ductile and may be without breaking. Its tensile strength is usually higher than that of grey cast iron and has excellent machining qualities.

The malleable cast iron is used for making wells of wagon wheels, small fittings for railway rolling stock, brake supports, parts of agricultural machinery pipe fittings, door hinges, locks etc.

2.2.10. NODULAR CAST IRON

The nodular cast iron is produced by adding magnesium in the molten cast iron. The magnesium converts the graphite of cast iron from flake from to spherical or nodular form.

It is usually used for pressure - resisting castings hydraulic cylinder heads, rolls for rolling mill and centrifugally cast products.

2.2.11. ALLOY CAST IRON

The alloy cast iron is produced by adding alloying elements like nickel, chromium, molybdenum, Copper, Silicon and manganese. These alloying elements give more strength and result in improvement of properties.

The alloy cast iron has special properties like increased strength, high wear resistance and corrosion resistance.

The alloy cast iron are used for automobile parts like cylinders, pistons, piston rings, crank cases, brake drums, parts of crushing and grinding machinery.

2.3. WROUGHT IRON

Wrought iron is a pure form of iron, which contains 99% of pure iron and only about one tenth percent of carbon. It comes from the furnace in a spongy and pasty state and subsequent hammering and rolling don't expert all traces of slag, which may be traced in layers in the finisher product.

2.3.1. PROPERTIES OF WROUGHT IRON

1. It is soft
2. It has high corrosion resistance
3. It is easy for welding
4. After heat treatment it become hardness

2.3.2. USES OF WROUGHT IRON

Wrought Iron is used to make rivets, Chains water and steam pipes, bolts and nuts, railway couplings, handrails, nails, wiring pipes, grain hooks, Agricultural tools.

2.4. STEELS

Steel is an alloy of iron and carbon with carbon content up to a maximum of 1.4 %. The carbon occurs in the form of iron carbide [Fe_2C], because of its ability to increase the hardness and strength of the steel. Other elements like (e.g) Silicon, Sulphur, Phosphorus and Manganese are also foresent to in a greater lesser amount to impart certain desired properties to it steel is manufactured in the following method.

1. Bessemer process
2. Open Hearth process
3. Electric furnace
4. L.D Process

According to IS 7598 - 1974, steel is classified into to types.

1. Plain Carbon Steel
2. Alloy Steel

2.4.1. PLAIN CARBON STEEL

Carbon is the main constituent affecting the properties of plain carbon steel. The content of carbon decides the strength and hardness of steel. However increase in carbon content decreases the ductility, formability, machinability, weldability, thermal and electrical conductivity and corrosion resistance. Plain carbon steel are classified according to their carbon content as detailed below.

I) LOW CARBON STEEL (MILD STEEL)

Mild steel in which the carbon content is 0.05 - 0.25% . Mild steel is not much affected by heat treatment process, especially the hardening process. A decrease in Carbon content improves the ductility of mild steel.

Mild steel is used making wires, sheets, rivets, nuts, bolts, screws, plates, tubes, rods, shafts, chain links, nails, ship hulls, car bodies, bridges, high duty gears etc.

II) MEDIUM CARBON STEEL

Medium carbon steel contain 0.25 to 0.55% of carbon. Medium carbon steel is stronger than mild steel but less ductile. Its mechanical properties can further be improved by proper heat treatment. Its mach inability is lesser than mild steel. It can be easily welded and forged.

Medium carbon steel is used for making axis, connecting rods, stronger nuts, bolts, shafts, gears wheels for trains and rails, various steel sections high tensile tubes, wire ropes, springs, hummer and snaps for riveters, agricultural tools etc.

III) HIGH CARBON STEEL

High carbon steel contain 0.55 to 1.4% carbon. The strength and hardness of steel increases with the increase of carbon content and strength almost reaches the maximum at about 0.8% carbon. Thereafter hardness continues to increase while strength starts decreasing. The mechanical properties like ductility and machinability of steel decrease with increase of carbon content. Its mechanical properties can be altered much by proper heat treatment.

High carbon steel is used to manufacture loco wheels, rails, wire ropes, drop hammer, dies, screw drivers, saws, wrenches, laminated sprigs, chisels, shear blades, punches, rock drills, pins, balls knives, files, clutch plates etc.

2.4.2. Alloy Steel

A steel in which elements other than carbon are added in sufficient quantity, in order to obtain special properties, is known as Alloy steel, The alloying of steel is generally alone to increase its strength, hardness, toughness, resistance to abrasior and wear and improve electrical and magnetic properties. The various alloying elements are nickel, chromium, molybdenum, cobalt, vanadium, manganese, silicon and tungsten.

I. Nickel Steel

Nickel steel is one of the most important alloying elements. Nickel steel contain 2 - 0.5% nickel and 0.1 to 0.5% carbon. In this range nickel improves tensile strength, raises elastic limit, imparts, hardness, toughness and reduces rust formation. A nickel steel alloy containing about 36% nickel and 0.5% carbon is known as Invar. It can be rolled, forged, turned and drawn.

Nickel steel is used for boiler plates, automobile engine parts, large forgings, Crank Shafts, Connecting rods, boiler tubes, valves for gas engines, pump panels, sparking plugs for petrol engines, pendulums of clock etc.

II. Chromium Steel

Chromium Steel contain 0.5 to 2% Chromium. The addition of chromium to steel increases strength, hardness and corrosion resistance.

Chromium steel is used for balls, rollers and races for bearings, dies, rolls for rolling mills permanent magnet etc.

2.5. NICKEL CHROMIUM STEEL

A Steel containing 3.25% nickel, 1.5% chromium and 0.25% carbon is known as nickel chromium steel. The combination of toughening effect of nickel and the hardening effect of chromium produces and steel of high tensile strength with great resistance to shock.

Nickel chromium steel is extensively used for motor car crank shafts, axles and gears requiring great strength and hardness.

2.6. MANGANESE STEEL

Manganese is added to steel in order to reduce the formation of iron sulphide by combining with sulphur. The manganese alloy steels containing over 1.5% manganese with a carbon range of 0.4% to 0.55% are widely used for gears, axles, shafts and other parts where high strength combined with fair ductility is required. Steel containing manganese varying from 10 to 14% and carbon from 1 to 1.3% form an alloy steel, which is extensively hard and tough and a high resistance to abrasion. It is largely used for mining, rock crushing and railways equipments.

2.7. MOLYBDENUM STEEL

A very small quantity 0.15 to 0.30% molybdenum is generally used with chromium and manganese (0.5 to 0.8%) to make molybdenum steel. These steel possess extra tensile strength and are used for aero plane and automobile parts.

2.8. STAINLESS STEEL

It is a steel, which when correctly heat - treated and finished, resists oxidation and corrosive attack from corrosive media. Following are the different types of stainless steels.

i) Few tic stainless steel

ii) Marten sic Stainless Steel

iii) Austenite Stainless Steel

2.8.1. Uses

Stainless steel are used for making bearings, springs shafts, medical insruments, sheet, wire, utensils and chemical industry appliances, storage and transport tanks.

QUESTIONS

Part A

I. Choose the Correct Answer

1. Metals which contains Iron is called .... metal.

   a) Non-ferrous metal b) Ferrous metal c) Alloy metal d) Non-metal materials

2. Metal which contain other than iron is called .... metal

   a) Ferrous metal b) Non-Ferrous metal c) Non metal material d) Alloy metal.

3. Cast iron is an example for .... metal.

   a) Alloy metal b) Nonferrous metal c) Ferrous metal. d) Non mental material

4. Wrought iron is an example for .... metal

   a) Non ferrous metal b) Non metal material c) Alloy metal d) Ferrous metal

5. Steel is an example for ....metal.

   a) Non metal material b) Ferrous metal c) Non ferrous metal d) Alloy metal

6. Copper is an example for .... metal

   a) ferrous metal b) Non farrous metal c) Alloy metal d) Non metal material

7. Zine is an example for .... metal

   a) Alloy metal b) Ferrous metal c) Non ferrous metal d) Non metal material

8. Aluminium is an example for .... metal.

   a) Ferrous metal b) Non metal material c) Alloy metal d) Non ferrous metal

9. Brass belongs to .... metal

   a) Non ferrous metal b) Ferrous metal c) Alloy metal d) Non metal material

10. Bronze belongs to .... metal

    a) Ferrous metal b) Alloy metal c) Non ferrous metal d) Non metal material

11. Stainless Steel is an example for .... metal.

    a) Alloy metal b) Non ferrous metal c) Non metal material d)Ferrous metal

12. Nichrome belongs to .... metal.

    a) Non ferrous metal b) Non metal material. c)Ferrous metal d) Alloy metal

13. One of the Iron one is ....

    a) Copper pyrites b) Haematite c) Bauzite d) Tinstone.

14. Alloy Steel containing 36% of nickel and 0.5% of carbon is called as. ....

    a) Chromium steel b) Invar Steel c) Nickal Chromium steel d) Manganese Steel

Part - B

II. Answer the following questions in one word

15. Write any two ferrous metal.
16. Write any two non ferrous metal.
17. Write any two Alloy metal.
18. Which iron ore is mostly used?
19. Which iron can be easily mould?

Part - C

III. Answer the following questions in briefly

20. What are the types of metal?
21. What is meant by ferrous metal?
22. What is called as non ferrous metal?
23. What is meant by Alloy metal?
24. Write the types of Iron ore
25. Write the types of Iron.
26. Write the types of Cast Iron.
27. Write the properties of wrought iron
28. Write the uses of wrought iron
29. What are the methods to extract steel?
30. Write the important alloy steel.

Part - D

IV. Answer the following questions in one page level

31. Write the properties of cast iron.
32. Write the properties and uses of wrought iron.

Part - E

V. Answer the following questions in two page level

33. Describe the different types of cast iron.
34. Explain the pain carbon steel.
35. Describe the types of Alloy steel.

3. NON - FERROUS METALS

3.0. INTRODUCTION

Non - Ferrous metal are those which contains a metal other than iron as their chief constituent.

The non ferrous metals are usually employed in industry due to following characteristics.

- Ease of fabrication (casting, rolling, forging, welding and machining)
- Resistance to corrosion
- Electrical and thermal conductivity
- Weight.

The various non ferrous metals used in engineering practice are copper, Aluminum, Lead, Tin, Bronze, Brass, Tungsten etc.

3.1. COPPER

Copper is one of the most extensively used non ferrous metals in industry. Copper is known as coinage metal, because it has been used in making coins due to their resistance to corrosion.

Minerals

The minerals of copper are

1. Copper pyrites [$Cu\,Fe\,S_2$]
2. Copper glance [$CU_2\,S$]
3. Cup rite [$Cu_2\,0$]
4. Azurite [$Cu(OH)_2\,2Cu\,Co_3$]

Of all these, Copper pyrites is the principal are which yields nearly 76 percent of the world production of copper.

Various steps involved in the extraction of copper metal from copper pyrites ore are Crushing, Concentration of ore, Roasting, Smelting and Bessemerization.

3.1.1. Properties of Copper

- It is a fairly soft, lustrous metal with reddish brown colour
- It melts at 1083°C
- It has a density 8900 kg/m^3
- It is a very good conductor of electricity
- It is a very good conductor of heat

- It is highly malleable and ductile
- It is highly corrosion resistant
- It is easily joined like soldering, brazing etc
- It is a non - magnetic metal
- It is easy to alloy
- It can be recycled without any loss of quality. 40% of the world demand is met by recycled copper.
- Copper and Copper alloys are tough
- Catalytic
- Antibacterial

3.1.2. Uses of Copper

- Due to its electrical conductivity, it is used for making electric wires and Cables
- Due to its thermal conductivity, it is used in making utensils, boilers and calorimeters
- Copper is used for making copper alloys like Brass and Bronze
- It is used in electroplating and electrotyping
- Due to its corrosion resistant, it is used in making coins
- It is used to make jewellery and statues
- It is used for making ammunitions (Bullet)
- It is used to make water pipes
- It is used for covering the bottoms of the wooden ships
- In the preparation of copper salts are largely used as insecticides

3.2. ALUMINIUM

Aluminum does not occur free in nature. In the combined state it is the third most abundant element found in nature, the first two being oxygen and silicon and forms 7.28 percent of the earth's crust. Aluminum was first isolated by wholer in 1827. It was obtained by the electrolysis of bauxite by Charles Martin Hall in 1886.

The important minerals of aluminum are

1. Cryolite [Na_3 AfF_6]
2. Corundum [Al_2 O_3]

The bauxite is the chief ore of aluminum. Aluminum is usually isolated from bauxite by electrolysis.

3.2.1. Minerals

The important minerals of Aluminum are

1. Bauxite [AI_2O_3 $2H_2O$]
2. Cryolite [Na_3 AIF_6]
3. Corundum [Al_2 O_3]

The Bauxite is the chief one of Aluminum. Aluminum is usually isolated from bauxite by electrolysis method.

3.2.2. Properties of aluminum

- It is a silvery white metal
- It is a good conductor of electricity
- It is a good conductor of heat
- It is extremely light weight, It is only one third the weight of steel
- It melts at 660°C and boils at 2400°C
- It has a density 27g/cm^2
- It is malleable and ductile
- It is a non - magnetic metal
- It is a non - toxicity
- It is easy to alloy
- It is easily worked by the common manufacturing and shaping process
- Aluminum and most of its.allows are highly resistant to most form of corrosion due its natural coating of aluminum oxide.
- Aluminum is non - combustible

3.2.3. Uses of Aluminium

It is used in making electric cables and transmission wires because of its high electrical conductivity.

- It is used in utensils because of its high thermal conductivity.
- Aluminum alloys are used for making the parts of aero planes, ships, motor cars, Scientific instrument, strong permanent magnet, Rivet.
- It is used for preparation of alloys like Durations, Magnalium, Y-Alloy, Hindalium.
- Aluminum foil deposited on glass forms an excellent mirror.

- Aluminum powder is used in making silver paints fire works, flash light powder and termite welding.
- A mixture of Aluminum powder and ammonium hit rate is used in explosives.
- It is used as a reducing agent in the extraction of chromium and titanium.

3.3. TIN

The principal ore of Tin is Tinstone, The mineral is found interspread in rocks, especially in granite. It is said that small amount of tin are occasionally found native along with gold. The mineral is found in Malaysia, Indonesia, Australia, Mexico, Siam and china.

3.3.1. Propertines of Tin

- Tin is a silvery white metal, lustrous and soft.
- It is malleable and ductile.
- It can be rolled into very thin sheets.
- It melts at 232°C.
- Its specific gravity is 7.23.

3.3.2. Uses of Tin

- It is used for making alloys.
- It is used in the manufacture of Tinplate. Tinplated steel products are used in caning fruit, meat etc.
- Tin foil used as moisture proof packing.
- Fin solder.
- It is used in the tining of utensils.

3.4. BRONZE

The alloys of copper and Tin are usually termed as Bronze. The useful range of composition is 75 to 95% copper and 5 to 25% Tin. The metal is comparatively hard, resists surface wear and can be shaped or rolled into wires, rods and sheets very easily. Corrosion resistant properties of bronzes are superior to brass. Some of the common types of bronze are as follows.

1. Phosper bronze
2. Silicon bronze
3. Manganese bronze
4. Gun metal

3.4.1. Phosper Bronze

When bronze contains phosphorus, it is called phosper bronze. Phosphorous increases the strength ductility, wear resistance and soundness of castings.

Phosper bronze is used for springs, gears, pump parts, bushes and bearings.

3.4.2. Silicon Bronze

Silicon bronze contains 96% copper 3% silicon and 1% manganese or zinc. It has good corrosion resistance and high strength material.

It is widely used for boilers, tanks, stoves, matrine hardware, pump parts or where high strength and good corrosion resistance required.

3.4.3. Manganess Bronze

It is an alloy of copper, zinc and little percentage of manganese. The usual composition of this bronze is 60% copper, 35% zinc and 5% manganese.

It is widely used for ship propellers because of its excellent resistance to corrosion and high strength.

3.5. GUNMETAL

It is an alloy of copper, tin and zinc. It usually contain 88% copper 10% and 2% zinc. The zinc is added to clean the metal and to increase it. The metal is very strong and resistant to corrosion by water and atmosphere. Originally, it was made for casting guns. It is used for casting boiler fittings, bushes and bearings.

3.6. BRASS

The alloy of copper and zinc is called Brass. There ae various types of brasses, depending upon the proportion of copper and zinc. This is fundamentally a binary alloy of copper with zinc each 505 . By adding small quantities of other elements, the properties of brass may be greatly changed. For example, the addition of lead (1 to 2%) improves the machining quality of brass.

3.6.1. Properties of Brass

- It is malleable and ductile.
- It can be hot worked.
- It is a soft material.
- It has fair electrical conductivity and non magnetic.
- It has excellent corrosion resistance.
- It is easy for moulding.

3.6.2. Uses of Brass

Brass is used for making plates, tubes, plumbing fittings, automobile fittings, type writer parts, musical instruments, Heat exchangers springs, bearings, bushes, Utensils and marine castings.

3.7. TUNGSTEN

The chief minerals of tungsten are

1. Wolframite
2. Scheelite Calcium tungstate
3. Tungstenite
4. Cupro scheelite

3.7.1. Properties of Tungsten

- It is hard silvery white metal
- It is as heavy as gold.
- It has the highest melting point of any metal.
- Its wire is hard and has high tensile strength.

3.7.2. Uses of Tungsten

- Tungsten is mainly used for preparing special steel sand filamerits of electric lamps.
- It is used for preparing strings of musical instruments, pen points.
- It is used in anticathodes in X-ray tubes.
- Tungsten is used in making surgical, instruments, spark coils, gramophone, needle voltage regulators, telegraphic keys etc.

Questions

Part - A

I. Choose the Correct Answer

1) One of the Copper ore is ....

a) The Copper Pyrites b) Haematite c) Bauxite d) Siderite

2) The mostly used one to extract Copper is ....

a) Copper Glance b) Cuprite c) Malahcite d) Copper pyrites

3) One of the Aluminium ore is ....

a) Cuprite b) Limonite c) Bauxite d) Tinstone.

4) Aluminium Finds in .... Percentage of the earth crust.

a) 8.27 b) 7.28 c) 7.82 d) 8.72.

5) .... is the ore of Tin

a) Bauxite b) Cuprite c) Tinstone d) magnetite.

6) One of the Tungsten ore is ....

a) Cuprite b) Bauxite c) Wolframite d) Limonite.

Part - B

II. Answer the following questions in one word

7. Which is called as coinage metal?
8. How many percentage of Alminium finds in earth crust?
9. Which is the important ore of Tin?
10. Write the materials which contains in Bronze?
11. Write the materials which contains in Brass?

Part - C

III. Answer the following questions in briefly

12. Write the minerals of copper
13. Write the minerals of Aluminium
14. What are the type of Bronze?
15. Write the minerals of Tungs ten?
16. What is meant by Brass?
17. What is meant by Bronze?

Part - D

IV. Answer the following questions in one page level

18. Write the properties and uses of Tin.
19. Describe the types of Bronze.
20. Write the properties and uses of Brass
21. Write the properties and uses of Tungsten.

Part - E

V. Answer the following questions in two page level

22. Write the properties and uses of Copper.
23. Write the properties and uses of Aluminium.

4. NON METAL MATERIALS

4.1. PLASTIC

Plastic may be defined as an organic polymer, which can be molded into any desired shape and size with the help of heat, pressure or both. The plastic, in its liquid form is known as resin. The plastics may contain a number of constituent including binders, fillers, dyes or pigments, plasticizers, lubricants, solvents and catalysis's.

All the plastics are, usually classified on the basis of the nature of binder used in their manufacture. The binders may be natural synthetic polymers.

4.1.1. Types of Plastic

Plastics are normally divided into two categories on the basis of the type of resin used in their preparation. 1. Thermoplastic 2. Thermo set plastic

4.2. THERMOPLASTIC

Thermoplastics resins are the polymers whose plasticity increases with the increase in temperature. They can be softened and hardened by heating and cooling any number of times. They can be rolled or extruded simply by heating the material. Some of the thermo plastics is given below.

- Polyethylene
- Poly propylene
- Polyvinyl chloride (PVC)
- Poly tetra flunoroethylene

4.2.1. Properties of Thermoplastic

1. Excellent electrical insulation
2. High resistance to chemicals
3. Excellent Light transmitting power
4. Ease of fabrication and resistance of moisture
5. Excellent mechanical properties
6. Easy to molding and remolding

4.2.2. Uses of Thermoplastic

1. It is used for insulating coatings for electric wires, films sheets, pipes, bottles, buckets etc.
2. It is used for Refrigerator door liners, hot drink cups, radio and Television cabinets, food containers.
3. It is used for rain coats, hand bags, lead wire insulation, vinyl flooring

4. It is used for light covers, lamp shades, lenses, sign boards, plastic jeweler.

5. It is used for toys, flash light cases, helmets, trays, plastic films.

4.3. THERMOSETTING PLASTICS

Thermosetting plastics are formed by condensation polymerization. Thermosetting plastics cannot be soft end, once they are molded, even at high temperature. Some of the thermosetting plastics are

- Polyesters
- Phenol formaldehyde
- Urea formaldehyde
- Melamine formaldehyde

4.3.1. Properties of Thermosetting Plastic

- Excellent electrical insulation
- Thermosetting plastics are hard, tough, non-swelling and more brittle than thermoplastic
- They have excellent tensile strength and flame resistance.
- They have excellent adhesive properties, resistance to chemicals
- These plastics cannot be mechanically deformed or softened of high temperature.
- It can not be remolded into any new shape.

4.3.2. Uses of Thermosetting Plastics

- It is used for insulation for wire and cable
- It is used for making electric iron handles, socket bases, fan-motor housings, switch covers.
- It is used for making dials, electric mixer housings, cosmetic boxes, distributor heads
- it is used for plastic rockery and automobile parts.

4.4. RUBBER

Rubber may be defined as an organic polymer, which elongates on stretching and regains its original shape after the removal of the stress. Today the rubber is considered to be one of the most important material in the world. A major portion of a rubber is consumed in the field of manufacture of types and tubes for the vehicles.

Rubber may be classified as natural and synthetic rubber. Natural rubber is obtained from rubber trees grown in hot climates synthetic rubber is an artificial rubber produced by chemical processes. Synthetic rubber processes some unusual properties not available in natural rubber. Synthetic rubber has a elastic rubber, has a higher elastic property than the natural rubber and it resists light rays more effectively.

4.4.1. Properties of Rubber

- It possesses the quality of flexibility
- It can with stand shock and vibration
- It is possible to produce rubber with a are desirable property by the process of vulcanizing and compounding.
- They have high resistance to abrasion and weathering
- They have excellent oil, grease and solvent vesistoma
- Synthetic rubber has resistance to aid and petroleum

4.4.2. Uses of Rubber

- Rubber is used to manufacture tires and inner tubes in automobile.
- It is used as a lining material in machineries to act as a cushion and to produce air and liquid tightness.
- Synthetic rubber is used to manufacture containers and pipes to carry kerosene, petrol
- Rubber is used to manufacture of conveyer belts, shoe soles, flooring, electric wire insulation, Erasers Holes, taps, Gloves, Apron, and adhesives etc.

4.5. GLASS

Glass is a mixture of silica, chalk and potash or soda. It is amorphous and transparent. In recent times, glass has come out as the most versatile engineering material. All the ingredients of glass are thoroughly ground, sieved and mixed in required quantities. This mixture is place furnace and fused at a temperature of 1100°C. The molten glass can be given any desired shape.

4.5.1. Properties of Glass

The properties of glass vary with reference to the composition of constituents, the nature of surface, heat treatment condition and its thickness.

1. It can be polished to a very high degree
2. It refracts or transmits light
3. It is a transparent material and permits visibility.
4. It is a good electrical insulator
5. It is not affected by air, water and ordinary chemical reagents.
6. It is capable of being worked in an innumerable number of ways. It can be blown, drawn or pressed.

4.5.2. Uses of Glass

Glass is used to manufacture lenses, prisms, mirrors, etc which are used in optical instrument.

Glass can be reinforced with metallic fibers to make it suitable for use in wind screens of automobile and as window panels in residential buildings to prevent it from shattering.

QUESTIONS

Part - A

I. Answer the following questions in one word

1. Write the types of plastic
2. What is the expansion for PVC?
3. Natural rubber is obtained from rubber trees grown in which place?
4. What are the types of rubber?

Part - B

II. Answer the following questions in briefly

5. What is meant by Thermoplastic?
6. Write the type of Thermo Plastic.
7. Write the properties of thermoplastic.
8. Write the uses of thermoplastic
9. What is meant by Thermosetting plastic?
10. Write the types of Thermosetting plastic.

Part - C

III. Answer the following questions in one page level

11. Write the properties and uses of thermoplatic.
12. Write the properties and uses of thermosetting plastic.
13. Write the properties and uses of Rubber
14. Write he properties and uses of Glass.

Part - D

V. Answer the following questions in two page level

15. Describe about thermo plastic.
16. Describe about thermo setting plastic.

5. FORCE

5.0. Introduction

An Engineer should have a through knowledge about the behavior of various materials in structure and machines, under the action of external force. Such a sound knowledge helps him to select the suitable material and the size of each element of the structure or machine, so that the element will function satisfactorily when the structure or the machine is put into service.

The parts of a structure change their dimensions and shape to some extent when the structure is subjected to loading. This change in shape and size is known as deformation. No engineering material is perfectly rigid and all the materials under go different amounts of deformation when subjected to loading.

5.1. Stress

It is the internal resistance set up in a material under the action of the

external forces. Mathematically

$$\text{Stress } \alpha = \frac{P}{Ao}$$

Where P = Force or load acting on the body

Ao = Original cross-sectional area of the body.

5.1.1. Strain

It is the deformation per unit length under the action of the External forces. Mathematically

$$\text{Stress} = \frac{(L - Lo)}{Lo}$$

Lo Where Lo = Original length

L = Final length.

The strain may be classified into elastic strain and plastic strain. The elastic strain which is present so long as the external forces ae applied. It disappears after the removal of the forces.

The plastic strain is the permanent strain caused by external forces, when the stress exceeds the elastic limit.

5.1.2. Types of stresses

Though there are many types of stress, yet the following are the important stresses.

1) Tensile stress

2) Compressive stress

3) Shear stress

5.1.3. (1) Tensile stress

When a section of any ductile material is subjected to two equal and opposite forces as a result of which the body tends to increase its length as shown in Fig. 5.1.3.(a), the stress induced is called tensile stress and the corresponding strain is called tensile strain.

$$\text{Tensile strain} = \frac{\text{Increase in length}}{\text{Original length}}$$

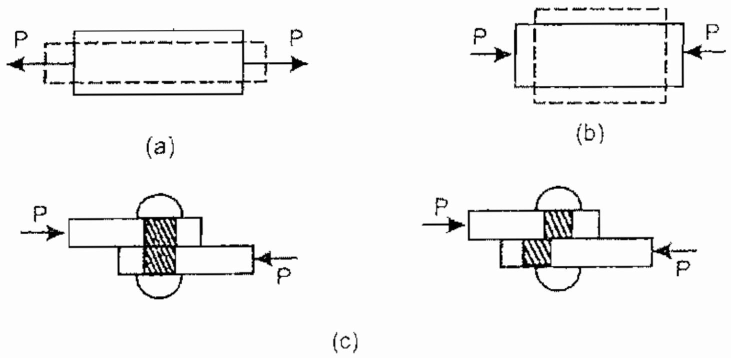

Fig. 5.1.3.

2) Compressive stress

When a section of any ductile material is subjected to two equal and opposite pushes, as a result of which the body tends to decrease its length, as shown in Fig. 5.1.3 (b), the stress included is called compressive stress and corresponding strain is called compressive strain.

The strain produced by compressive stress is obtained by dividing the decrease in length by the original length.

3) Shear stress

When a section of any ductile material is subjected to two equal and opposite forces, acting tangentially across the resisting section, as a result of which the body tends to shear of across the section as shown in Fig. 5.1.3.(c), the stress induced is called shear stress and the corresponding strain is called shear strain.

QUESTIONS

Part - A

I. Answer the following questions in one word

1. What is the name of the strain occur due to tensile stress?
2. What is the name of the strain occur due to Compressive stress?
3. What is the name of the strain occur due to Shearstress?

Part -B

II. Answer the following questions in briefly

4. What is meant by Stress?
5. What is meant by strain?
6. What are the types of stress?
7. What is meant by Tensile Stress?
8. What is meant by Tensile Strain?
9. What is meant by compressive Stress?
10. What is meant by compressive Strain?
11. What is meant by Shear Stress?
12. What is meant by hear Strain?

Part - D

III. Answer the following questions in one page level

13. Explain the different types of Stresses?

6. ELASTICITY

6.0. ELASTICITY

When a force is applied on a body, a change in shape (deformation) is produced. But at the moment when the force is removed the deformation disappears. This property of a body by virtue of which the body regains its original shape on removed of the force, is known as Elasticity.

6.1. ELASTIC LIMIT

A material will elongate when a pull P is applied. When the magnitude of the pull is slowly increased, the amount of elongation will also increase. When the pulling force at the end is removed, the material tries to come back to its original length. The maximum load which will cause a stress for a given material with in which the resulting strain fully disappears after the removed of the stress is called the'Elastic Limit'.

6.1.1. Hook's Law

The Hook's law states "when a material is loaded within its elastic limit, the stress is proportional to strain".

6.1.2. Young's Modulus

From the above, it is clear that within the elastic limit stress is directly proportional to strain.

ie. Stress x Strain

$$\frac{\text{Stress}}{\text{Strain}} = \text{Constant} = \text{E Strain}$$

The constant in the above equation is called the modulus of elasticity or Young's Modulus. The symbol used for young's modulus is E. It is different for different materials.

6.1.3. Testing of Tensile Force

The tensile test of a metal is generally performed to determine

1) Proportional and elastic limit

2) Yield point

3) Ultimate tensile strength

4) Percentage elongation and reduction area.

The results obtained by the tensile test are widely used in the design of materials for structures and other purposes. In this test, the test piece is pulled out at a constant rate by gradually increasing the axial pull, till the rupture takes place.

The tensile test for a ductile material is, generally carried out with the help of a universal testing machine on the specimen made from the material to be tested.

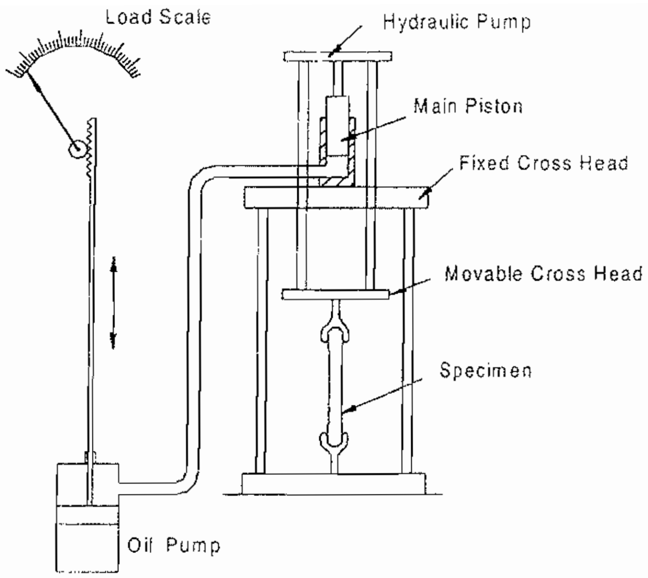

Universal Testing Machine

Fig. 6.1.3.(a)

The schematic working arrangement of a universal testing machine is shown in Fig.6.1.3.(a). The specimen is held in the jaws of the machine. And load is applied gradually by a hydraulic press, which is measured from the pressure developed inside the cylinder. The function of the oil pump is to supply of oil under pressure to the hydraulic cylinder.

The load reading is noted directly from the load side.

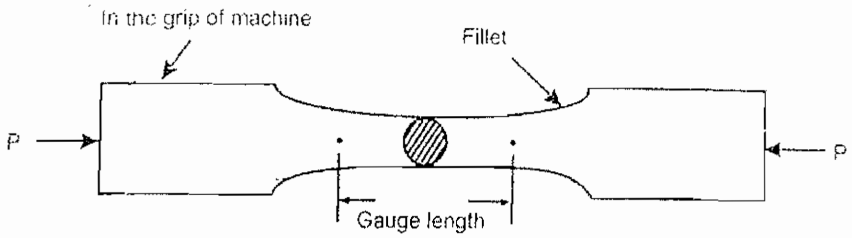

Tensile test spicemen

Fig. 6.1.3. (b)

The dimension and form of the specimen varies according to the size and shape of the material to be tested and the main objective in view. The test carried out on a specimen having uniform cross-section though out gauge length as shown in Fig. 6.1.3.(b).

The tensile load is gradually increased and the corresponding extensions are recorded. Now a graph is plotted with stresses along the vertical axis and the corresponding strains along the horizontal axis. If we draw a curve passing through the vicinity of all such points, we shall obtain a curve as shown in Fig. 6.1.3. (c) such a graph is known as stress-strain diagram for a given ductile material (say mild steal)

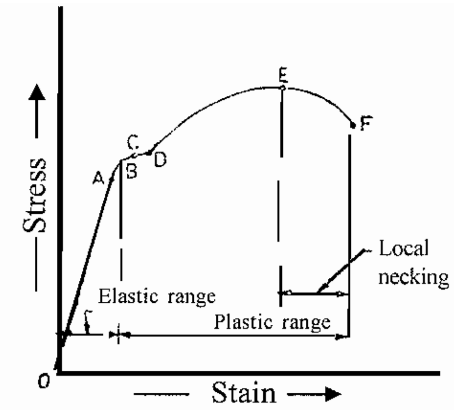

Fig. 6.1.3.(c) Stress-Strain curve for mild steel

The stress-strain diagram shown in Fig.6.1.3.(c) gives us information about the following important points.

1) The graph OA is a fairly long straight line, which indicates that the ratio of stress to strain is constant and Hooke's law holds good from (0) to (A). The point (A), where the curve deviates from the straight line, is known as proportionality or proportional limit.

2) The graph AB is a very small curve (in certain materials of negligible length) which indicates that the ratio of stress to the strain B not constant, but slightly changes. In this portion the metal continues to behave perfectly elastic. The point (B) is known as elastic point.

3) The graph BC is another very small curve which indicates that the strain increases more quickly than the stress (in comparison to OA or AB) The point (C) is called yield point. It may be noted that if the load on the specimen removed, then the elongation from (B) to (C) will not disappear. But it will remain as a permanent set.

4) The graph CD is also a very small curve (almost horizontal) which indicates that the strain increases without any increase in stress. This happens as there is a sudden elongation of the specimen due to creep, without any appreciable increase in stress. During this ductile elongation of the specimen cross sectional area gets reduced uniformly in proportion to its length.

5) The graph DE is an upward curve, which indicates that the specimen regains strength and higher values of stresses are required for higher strains. The graph rises up to the maximum limit indicated by the point (E). The stress, corresponding to the point (E) is known as ultimate tensile stress or tenacity, which is a measure of tensile strength of a material. The work done while stretching the specimen is transformed, largely, into heat and specimen becomes hot.

6) The graph EF is a downward curve, which indicates that a neck is formed, which deceases the cross sectional area of the specimen. Now it requires lesser load to continue extension till facture takes place at F. A little consideration will show, that less stress is necessary to break away the specimen. The stress corresponding to the point (F) is known as breaking stress.

7) It may be noted that the stress-strain curve gives a valuable information about mechanical properties of metal. The following terms are important in the tensile test of a specimen.

6.1.4. Elastic stress

The elastic load (Corresponding to point B) divided by the original coss-sectional area of the specimen is known as elastic stress.

$$\text{Elastic Stress} = \frac{\text{Elastic Load}}{\text{original cross-sectioal area}}$$

6.1.5. Working Stress

It is the stress, which is used by the engineers for their structures or machine components. The working stress is kept much below the elastic stress, and is also known as safe stress.

6.1.6. Ultimate stress

The ultimate load (corresponding to point E) divided by the original cross-sectional area of the specimen is known as ultimate stress. The ultimate stress is also called ultimate tensile stress or tenacity.

6.1.7. Factor of safety

The ratio of ultimate stress to the working stress is known as factor of safety.

$$\text{Factor of safety} = \frac{\text{Ultimate Stress}}{\text{Working Stress}}$$

6.1.8. Percentage of Elongation

The elongation or increase in length divided by the original length of the specimen, expressed in percentage is known as percentage elongation.

$$\text{Percentage of Elongation} = \frac{\text{Increase in length of the specimen}}{\text{Original length of the specimen}} \times 100$$

6.1.9. Percentage reduction of area

The reduction in cross-sectional area divided by the original cross-sectional area of the specimen, expressed as percent, is known as percentage reduction of area.

$$\text{Percentage reduction of area} = \frac{\text{Reduction in cross sectional area}}{\text{Original cross} - \text{sectional area}} \times 100$$

QUESTIONS

Part - A

I. Answer the following questions in briefly

1. Define Hook's Law.
2. What is meant by Young's modulus?
3. How elastic stress can be calculated?
4. What is meant by working stress?
5. What is meant by Ultimate Stress/
6. What is called as Factor of Safety?
7. What is meant by elastic limit?
8. What is meant by elasticity?
9. What is meant by percentage of elongation?
10. What is meant by percentage reduction of area?

Part - B

II. Answer the following questions in one page level

11. Draw and Explain the stress stain curve.
12. Explain about the Tensile Test.

7. BENDING FORCE AND DEFLECTION

7.0. Introduction

Theory of simple Bending

Consider a small length 6x of a loaded beam subjected to a bending moment M as shown in figure below.

Now due to action of the bending movment M the top layer of the beam AC is suffered compression and reduced to A_1C_1

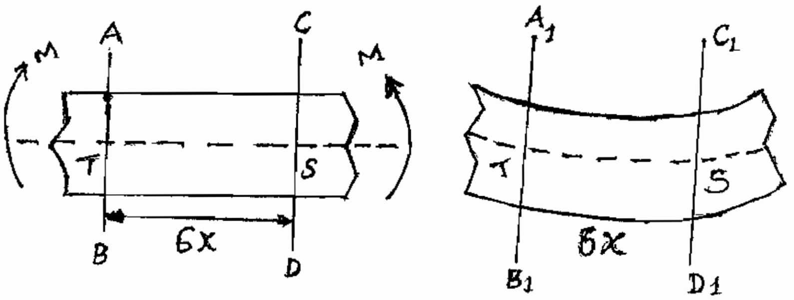

Before loading **After loading**

(a) **(b)**

Fig 7 (a,b)

Proceeding below, the bottom layer BD is suffered tension and hence stretched to B_1D_1 as shown in fig 7.b. Interestingly but obviously there is an intermediatc layer 'TS' which is neither compressed nor stretched. It remains unchanged with no strain and no stress. The layer in between top and bottom layers of the loaded beam which is neither stressed nor stained is known as neutral layer. This theory is called the theory of simple bending.

Bending force

The force acts on a horizontal body which cause the body to bend is called bending force. The difference between the initial stage and after the bending is the bending value.

7.1. Deflection

Definition

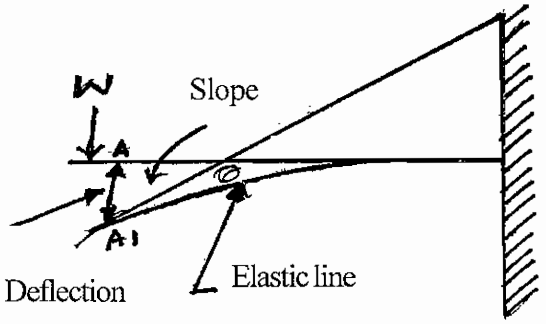

Fig. 7.1.

Deflection of a point in a loaded beam is the vertical displacement of that point between its two position before and after loading. see fig give above.

Moment of Inertia and Radius of Gyration

In the marked line for 'r' position 'a' which has its surrounding area was made to rotate is that position. The multiplication of the straight line of 'ar'. So it is called moment of Inertia. It is donated by 'I'.

Moment of Inertia = AK^2 when K is the radius of gyration.

Radius of Gyration

The radius of gyration of a section is the quantity obtained by the square root of the ratio of the M.I. of a section about centroidal axis and the area of whole section.

7.2. Electric poles

The electrical energy produced by generators run by water pressure, steam turbines or diesel engines is transmitted over long distances from the generator to the consumers or the device/machine which puts the energy to work. The transmission line is either underground that needs no support (or) supported by poles and towers overhead. The voltage of transmission line varies as per consumer's requirements and has to be supported on different capacity poles and towers further depending upon terrain to be crossed size and number of conductors and equipment to be carried. In India many types of structures are employed, among there are four types of poles used are as under.

Types of Electric poles

1. Wooden poles
2. Reinforced cement concrete poles (RCC)
3. Tubular poles.
4. Steel Tower

Sl.No.	Types of Poles	Maximum Spon (m)
1.	Wooden poles	40-50
2.	RCC poles	80-100
3.	Tubular poles	50-80
4.	Steel Tower	100-300

7.2.1. Wooden poles

As stated above, wooden poles are used to transmit small capacity overhead power lines at a safe distance above the ground. The wooden poles preferred on account of its initial low cost and natural insulating qualities. The choice of wooden poles depends upon what is available in that particular state or near by jungles. The pole should be sound and hard grown. straight and free from large knots. In northern india eucalyptus is commonly available it has good qualities it is light, strong, has gradual tapper and free from large knots. The special advantage is that it is available in any length. The length of a wooden pole depends upon clearance above the ground surface and secondly the number

of cross arms and other equipmet to be attached. Normally the length of wodden pole in 10 to 12 mtrs. The pole should strong enough to withstand wind pressure, and normal weight of equipment and conductors.

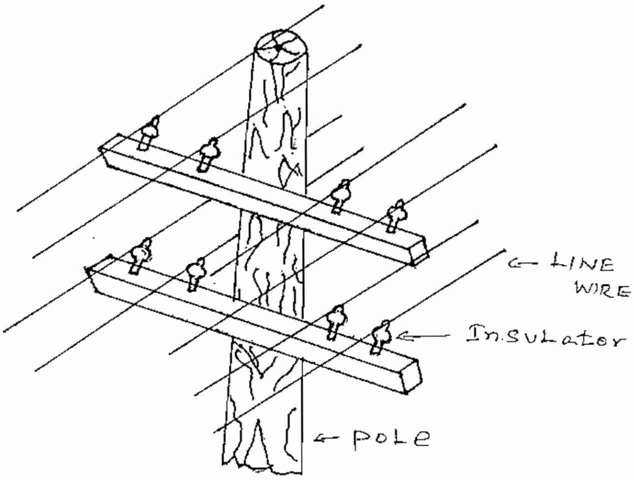

Fig 7.2.1

7.2.2. Concrete poles

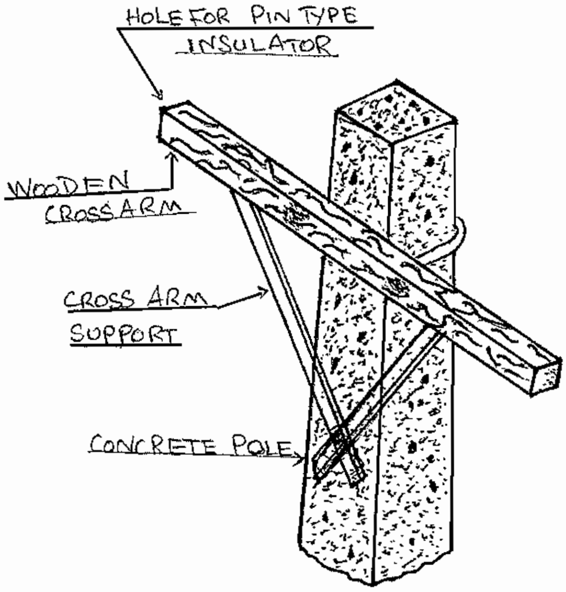

Fig 7.2.2

Concrete poles are very commonly used where scarcity of better quality wooden pole is experienced. it has certain advantages over wooden poles such as its longer life, being free from insects and atmospheric effects low maintenance cost and capacity to withstand more weight The concrete poles are used from normal street lines upto 33 KV power transmission line subject to length and thickness of pole. The concrete poles are disigned for a specified transmission line it has to carry. It consists of several re-inforcing steel bars held together with a seperate small diameter wire welded to steel bars at many places right from bottom to top lengthwise. Where height of concrete pole in required usually long the re-inforcing bars are to be welded to obtain required length. The cement concrete mixture is filled in and around the steel structure in a special mould.

7.2.3. Tubular Poles

The steel poles suitable for the small capacity transmission lines such as for street lighting may be made of tubular steel. rolled steel in single piece or small angles fitted or braced by lattice work. The advantage of tubular poles are that these are light and easy to install though initial cost is little more as compared to wooden poles. it does not need special equipment for its erection. The depth of pole into ground various depending upon length of pole. Soil condition, number of conductors to be supported for a tubular steel poles used for small capacity distribution net work and street lighting installations the structure is given below.

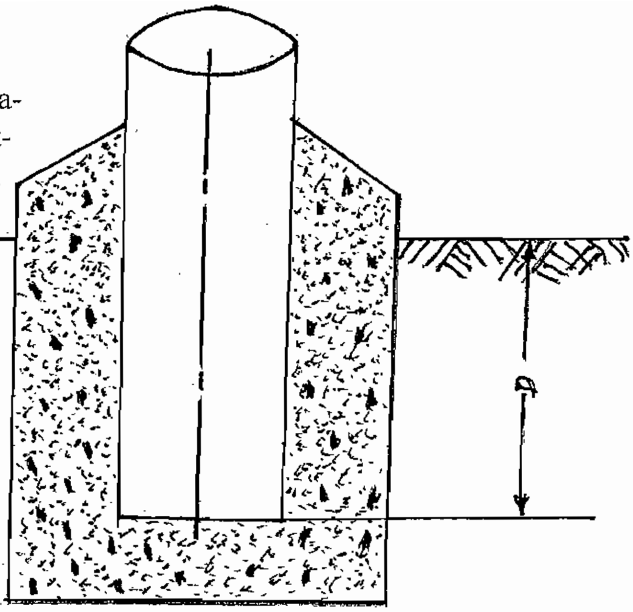

Fig. 7.2.3.

7.2.4. Steel Tower

Steel towers are used to transmit greater power and as such, stronger steel structures for large spans may be required. There is a very large variety of steel towers based on economy and suitability for instance, for long railway or river crossing, the spans may be more as such design of tower may vary according to requirements and terrain to be crossed.

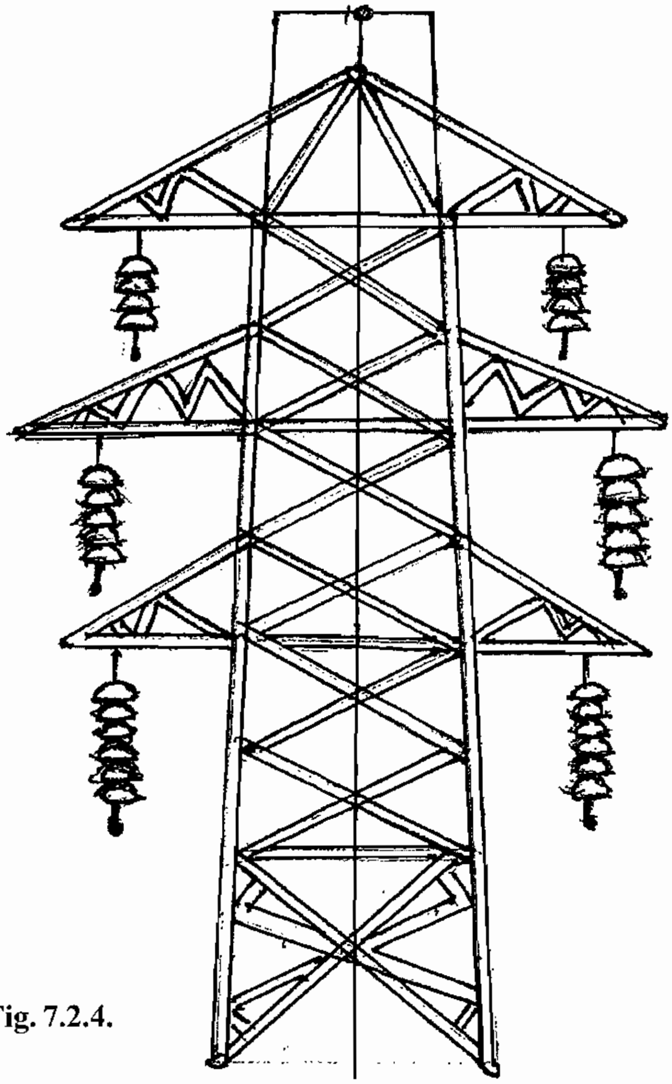

Fig. 7.2.4.

7.2.5. Properties of poles

1. The poles must be strong and the factor of safety should be between 2-5 and 3.

2. Should have less weight best with high strength.

3. Should be easily maintenance and less cost.

4. Should withstand all climatic conditions.

5. The poles should have good appearance as well as in safe condition.

7.3. Stay wire

The pole at the point of change in direction of L.T poles should be connected with extra wire, in order to withstand the tensile force of the pole is called stay wire.

A Frame is attached at the 1/3rd height from the top of the pole. A stay wire is connected from the toppole and through the frame and it is tightly tied the base of the pole as shown below in the fig.

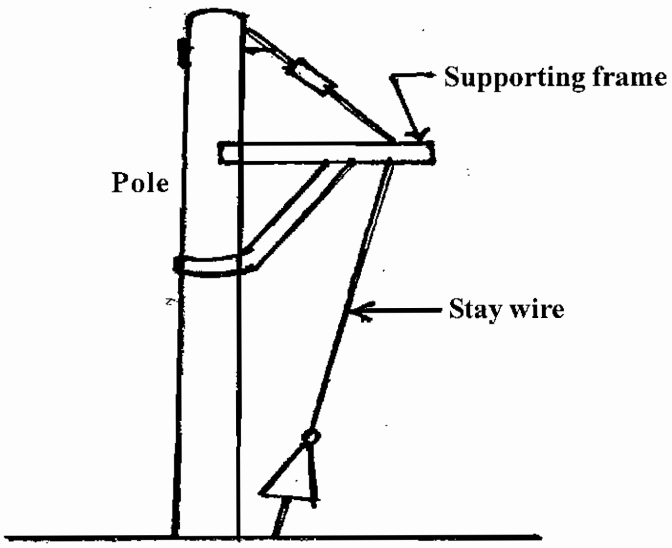

Fig. 7.3.

7.3.1. Supporting pole

A pole which is lesser in hiehg tis placed in particular angle as shown in the figure to give a support to the main pole.

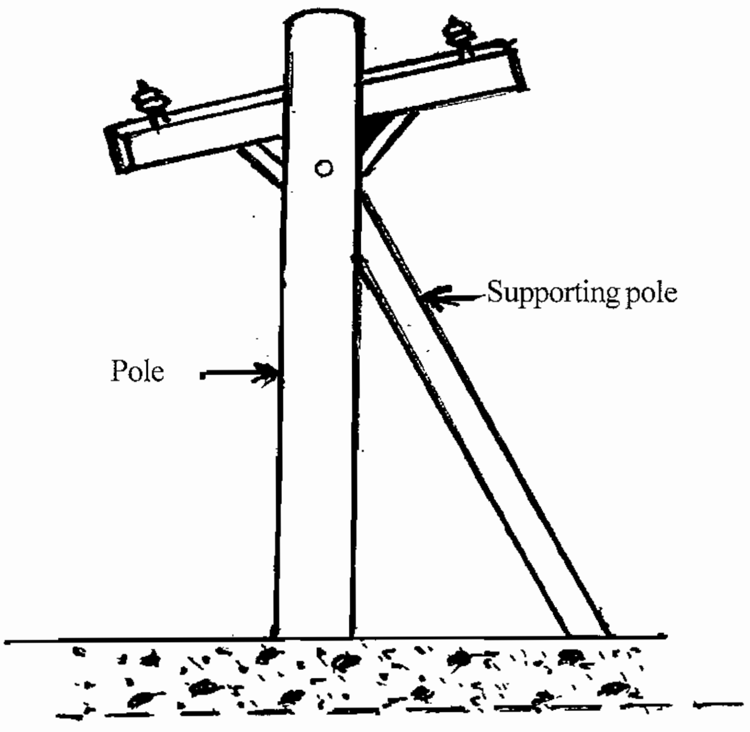

Fig. 7.3.1

7.3.2. Stay wire and support pole

A supporting pole is placed either vertically or started slightly near to the electrical pole and two poles are strongly coupled through steel wire (stay wire) then the supporting pole is heavily hounded with the groünd. The fig shown below is the structure of same.

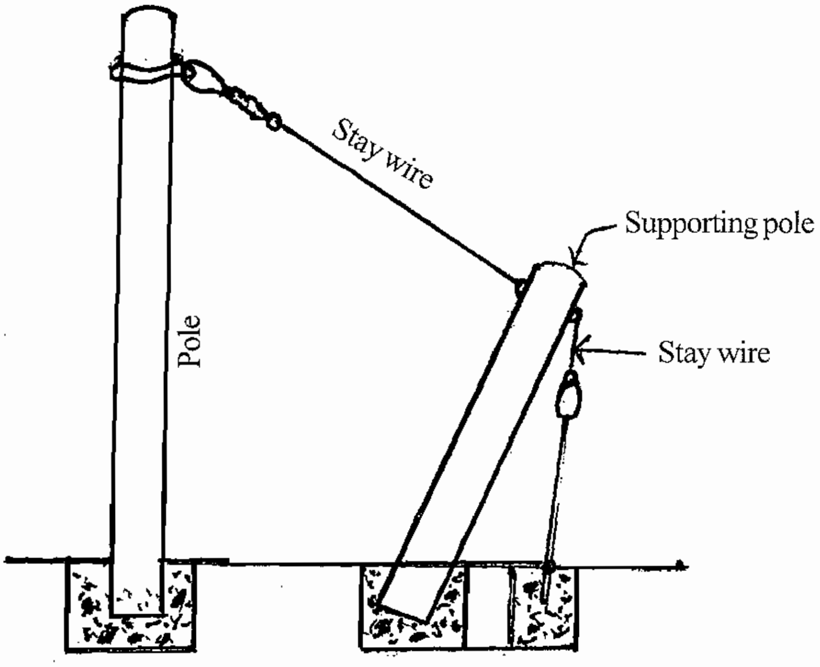

Fig. 7.3.2.

QUESTIONS

Part - A

I. Choose the Correct Answer

1. In generating station electrical energy is produced by ....

   a) Transformer b) Motor c) A.C. Generator d) D.C. Generator.

2. The Power from generating station to consumer's premises is carrying threw ....

   a) Cable b) Poles c) Antenna d) Dise

3. Generally the length of wooden pole for transmission line is ....

   a) 8 to 10 mtr b) 10 to 12 mtr c) 12 to 14 mtr d) 14 to 16 mtr.

4. In concrete poles are used for voltage level for transmission lines one up to.....................

   a) 11 KV b) 22 KV c) 33 KV d) 66 KV.

5. In Northern india power transmission is done by wooden pole .... type of wooden pole.

   a) banyan tree b) eccalyptus c) Coconut tree d) Arecanut.

6. A Supporting frame is attached to the main pole .... height from the tope of the pole

   a) 2/3 rd b) 1/3 rd c) 1 mtr d) 1-5 mtr.

7. The safety factor of pole should between .... to .... level.

   a) 2.5 to 3 b) 3 to 3.5 c) 3.5. to 4 d) 4 to 4.5.

Part B

II. One word Questions Type

1. Write down any one method to run the generator to produce electricity in power station?
2. Mention the max-span need for wooden Poles?
3. Mention the max-span need for steel Tower?
4. Write down any one advantage by using concrete pole in the transmission of power?
5. In which type of pole in suitable for without any special equipment for erection?
6. What type of poles are using for transmitting greater power?
7. Write down the name of pole which is lesser in height is placed in particular angle to the main pole?

Part - C

III. Answer the following questions in briefly

1. What is meant by bending?
2. Define:- Moment of Inertia?
3. Write down various types of electric poles?
4. What is meant by staywire?
5. Write is mean by radius of gyration?
6. What are the properties of poles?

Part - D

IV. Answer the following questions in one page level

1. Explain briefly the theory of Bending?
2. Show the arrangement of connecting staywire and supporting pole?

Part - E

V. Answer the following questions in two page level

1. Explain with neat sketches the various types of electric poles?

8. SPRINGS

8.0. Introduction

A spring is a mechanical device which when supported to even small loading will undergo large amount of deformatiion without getting permanently distorted. It is capable of absorbing resilience due to any type of loading which may be restored as and when required. The stored energy is released from the spring to do the needed work and is used again and again for the intended purpose. Simply a spring is an energy reservoir. Springs are quite comonly used in automobiles, railway wagons, values, watches etc.

8.1. Functions of springs

Springs are usually required to perform the following functions.

i) To cushion or reduce the effect of shock or impact loading. Ex;Automobile springs, railway buffers and shock absorbers.

ii) To measure forces in spring balance, meters and engine indicators.

iii) To store energy like in clocks, toys, circuit breakers, and starters.

iv) To apply forces and to control motions in brakes and clutches.

8.1.1. Types of springs

The most common types of springs are as follows:-

1. Laminated spring
2. Helical spring
3. Flat spiral Spring

8.1.2. Laminated spring

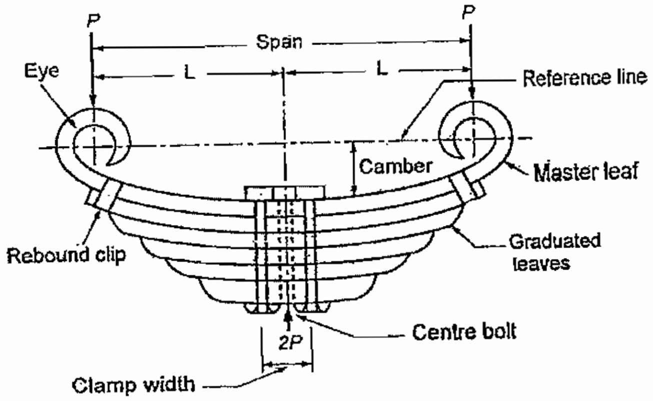

Fig. 8.1.2.

It is also called as Semi-elliptical spring, leaf spring, carriage spring and built up spring, as shown bellow in fig. This spring consists of number of leaves which are held together by U-clips. The long leaf fastened to the supports is called master leaf whose ends are bent to form an eye. Remaining leaves are small level called graduated leaves. If heavy loading is there one or more full-length leaves are provided

below the master leaf, such a spring no longer remains beam of uniform strength and correction must be applied for it. The perpendicular distance between the reference lines to the master leaf is called camber.

When the spring is subjected to maximum load, it becomes flat. The hole drilled in the plate for the bolt weakens the spring. Therefore the diameter of bolt should be subracted from width of plate when making calculations for strength of the spring. The pressure exerted by the U - clip reduces the bending stress in the central part of the spring. The U-Clip creates a stress concentration at the edge of the spring seat. It is reduced by providing soft pad between the leaf and seat. The ends of shorter or graduated leaes are clamped by rebound clips. They help to distribute the load which is developed by the rebound action otherwise, the total load may be taken by the master leaf along and it will fail easily.

Uses

This type of springs are used in motor cars, trucks, trains and trally etc.

2.Helical Springs

Helical springs are made of circular wire coiled into a helical form, the load being applied along the axis of the helix. In these springs, the major stress is shear stress due to twisting. The helical springs are classified into

a) Close-coiled helical spring

b) Open coiled helical spring.

a) Close coiled spring

The spring which are sustaining tensile force along their axes are called closed coil helical springs. These springs are having helix angle less than 10°.

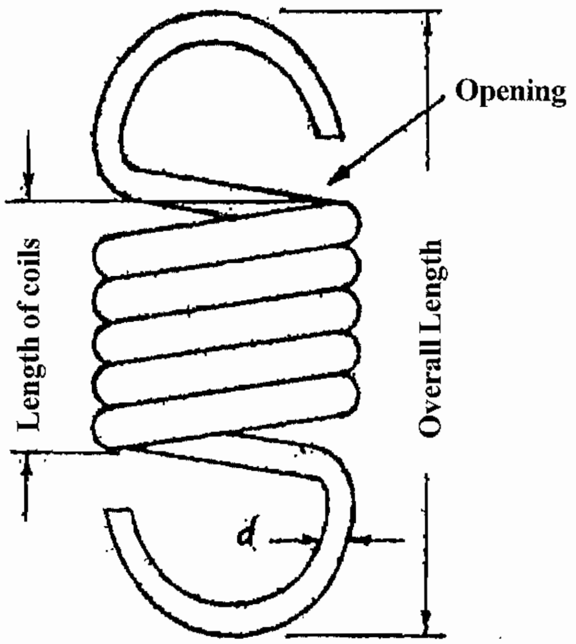

Fig 8.1.4.

b) Open coiled helical springs

The springs which can sustain compressive force along their axes. are called open coiled helical. These springs have helix angle more than 10° The fig shows under is open coiled springs.

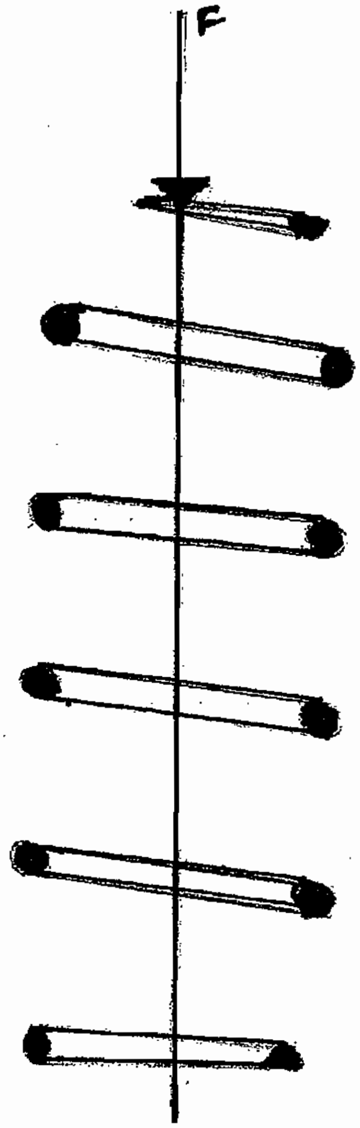

Fig. 8.1.5 (a)

Uses of Helical spring

It is used in switches, conductors, relays, centrifugal switches. The fig shows helical spring in the centrifugal switch of single phase motor.

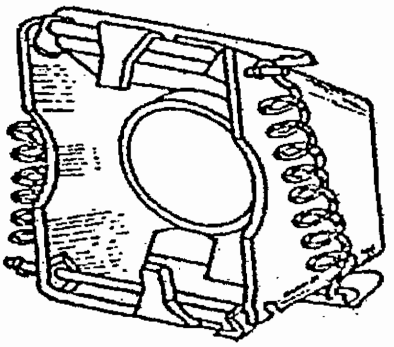

Fig. 8.1.5(b)

3. Flat Spiral spring

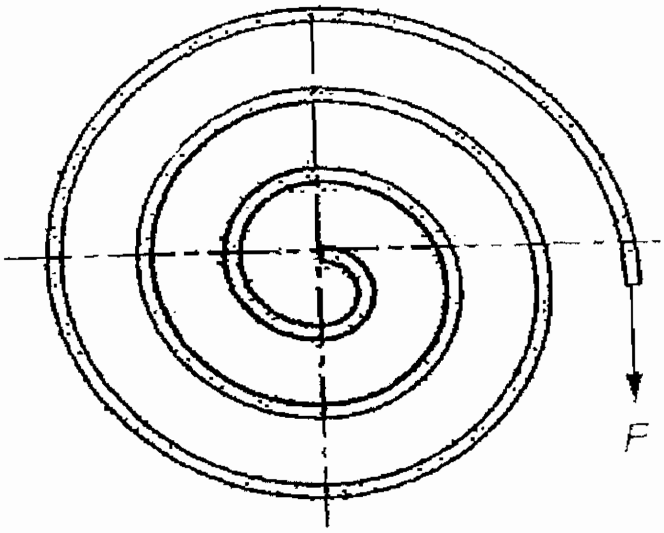

Fig. 8.1.6 (a)

These springs are made of flat strip wound in the form of spiral and loaded in torsion. In spiral spring, the major stress are tensile and compressive due to bending. The deflection is angular as shown above in fig.

It is also called watch spring. It is made up of thin elastic strip used in watches, gramophone etc, It is also used to give the controlling in measuring instruments.

Uses of spiral spring

The below fig shows spiral spring is used in D.C. motor, Universal motor to give the pressure to carbon brushes over the commutator. The pressure of the carbon brush should be 200 gm to 350 gms per sg.cm.

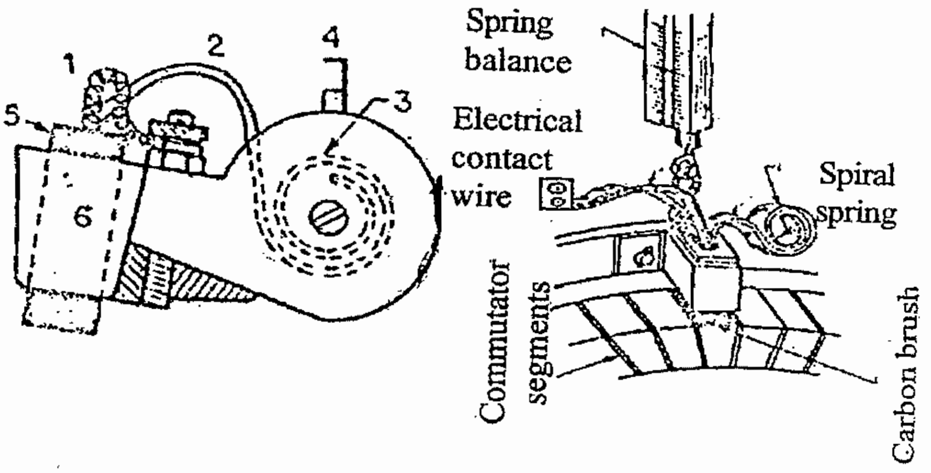

Fig. 8.1.6 (b)

Applications of phosper Bronze spirl a spring in the moving coil instruments

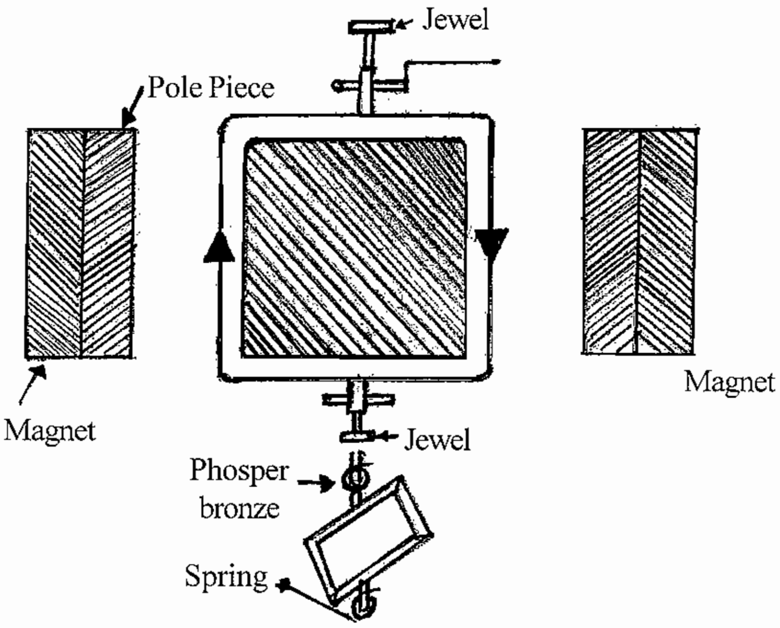

Fig. 8.1.7.

The above fig shows the springs in moving coil instruments. A rectangular shape rotating spring is placed between stationary magnetic poles and iron core. A thin spring made up of bronze provides a controlling torque. to the instrument. When the current passes through the moving coil, torque will be produced in the moving coil. At that time spring contracts simultaneously the needly moves and show the reading. It is used to measure only D.C. quantities.

Bearings

8.2. Introduction

Bearing is a part of a machine. Bearings are used to bear the machines rotating shaft and the other moving parts to move smoothly without any friction. Bearing is one of the important parts in the machine because it reduces the frictiion and allows the moving part to move smoothly. Now a days number of machineries are available without bearings.

8.2.1. Types of bearings

There are two types of bearings. They are

1. Plain bearings

    i) Bush Bearings

2. Anti frictional bearing

    i) Ball Bearing

    ii) Roller Bearing

8.2.2. Bush Bearing

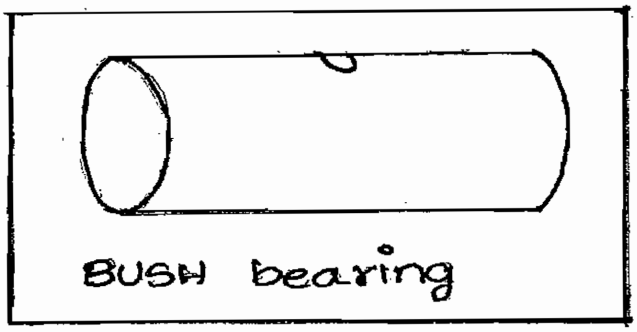

Fig. 8.2.2.

The above figure show the type of bush bearing. This type of bearing is made up of gun metal. it looks like a tube that contains holes. The shaft will rotate in the noles. This bearing also makes the tube separate into two parts. This type of bearing is used at low condition. In some type of fans, this bush bearing is used. If the cost of the bush bearing is low. The cost of the fan is also low. when compare to other bearing this bearing will soon set wear and tear. So this type of bearing may be often changed otherwise it will produce noise during running of motor.

8.2.3. Ball Bearing

This type of bearing reduces maximum amount of friction its construction is shown in the figure.

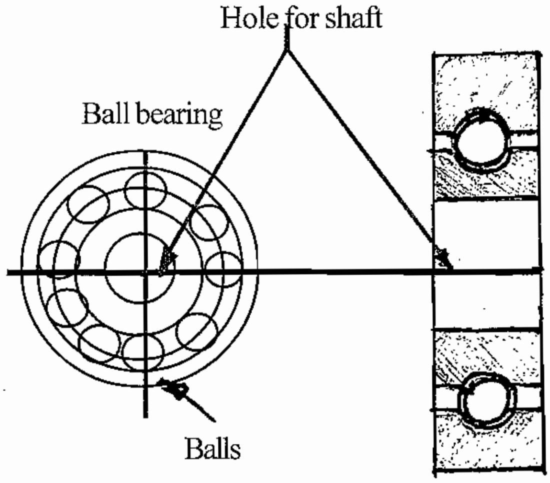

Fig. 8.2.3.

Ball bearing contains molybdenum steel balls. the construction of this type is used to prevent dust particles to go inside and grease which comes out from the bearing. It is used in high speed rotating machines. This bearing work good than the bush bearing and has long life time.

8.2.4. Roller bearing

This type of bearing also reduces the maximum amount of friction and the construction is shown inthe figure. Roller bearing is same as that as ball bearing.

like balls which are used in ball bearing, here rollers are used now a days instead of using rollers, taped roller bearings are used.

When compare to ball bearing. this roller bearing can withstand overload condition and the end thrust. This type of bearings are used to hold the rotor at both sides load is connected at one end of the rotor. so in large motors, roller bearing is connected at the side of load connected end of the rotor and ball bearing is connected to opposite side of the rotor.

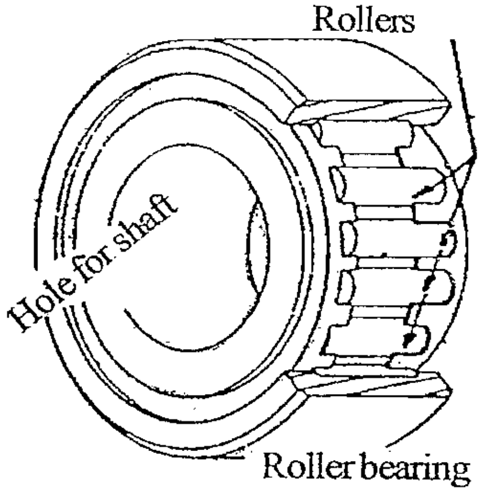

Fig. 8.2.4

Fitting of bearing and romoving of bearing

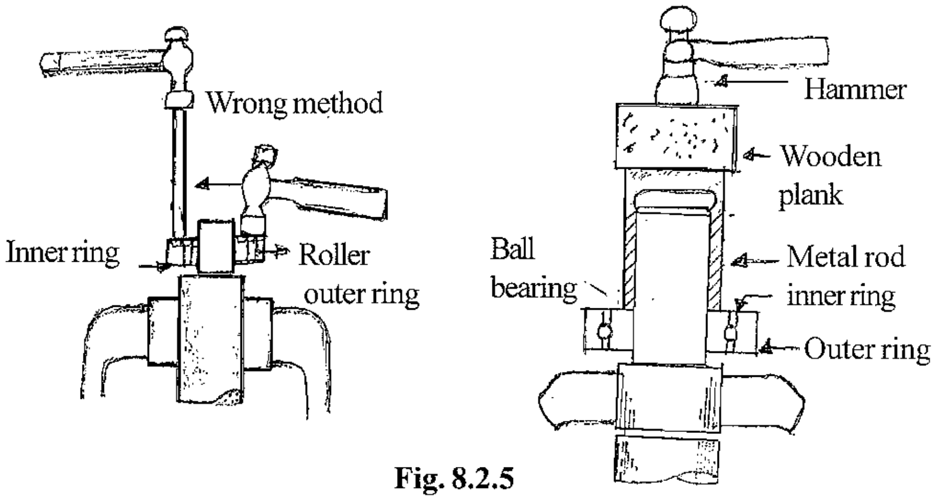

Fig. 8.2.5

The above figure shows the method of connecting ball and roller bearing in the shaft. Ball and roller bearings are manufactured minutely. so care should be taken while fixing these bearings. The following steps are given for fixing bearings.

a) First clean the fixing shaft and bearing neatly. While fixing the bearing on the shaft don't bear or strike out the bearing heavily because the roller and the inner ring in the roller bearing get damaged. Salt paper or emery sheet is used for clearing the shaft.

b) Place the bearing in vertical position to the shaft. Apply grease to the bearing. while inserting the bearing to the shaft. lightly strike the inner surface of the bearing using hammer. But the outer surface should not be strike.

c) If you cannot insert the bearing an the shaft using wooden hammer, take a pipe and place the one end at the centre ring of the bearing and strike the other end of the piple by using hammer and try to insert the bearing on the shaft.

d) After placing the bearing on the shaft at appropriate place, then apply good qualify grease to it.

8.2.6. Removing of bearing

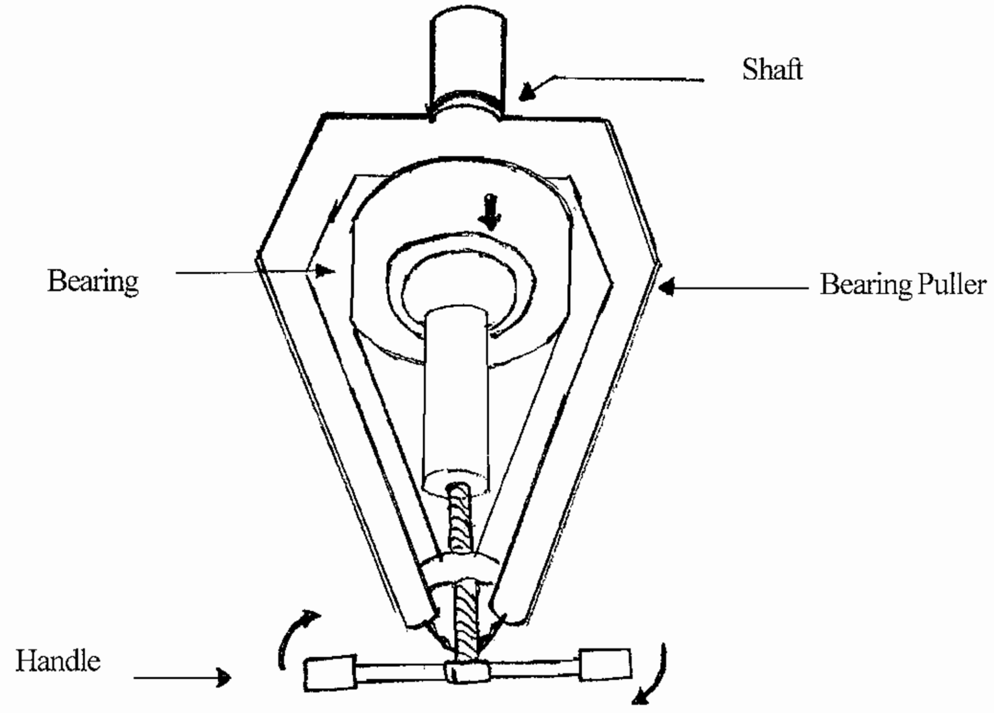

Fig. 8.2.6

By using bearing puller to remove the bearing from the shaft. The figure shows the removing of bearing from the shaft. After removing the bearing, cover it with neat paper otherwise it will get damage due to the dust particles. It is very difficult to insert the new bearing on the shaft. cannot beat or strike out using hammer. Instead of beating, put the bearing in the oil (i.e sell tellus-33) keeping at the temperature 90° for one hour. After this the bearing is easily fixed on the shaft.

8.2.7. Uses of Bearing

In most of the electrical machines ball bearings are preferred due to the following advantages

1. Ball bearings provide rolling friction which is much less than the sliding friction. so the starting torque required is low and the friction losses are less. Hence efficiency of the machine is high.

2. Use of ball bearing provides better shaft alignment which further increases the efficiency of the machine.

3. Since ball bearings are packed with grease so no care or little case in needed.

LUBRICATION

8.3. Introduction

In order to avoid the friction in between the machinery parts (i.e rotating parts) applying greasy substance is called lubricant. Applying this greasy substance or Lubricant to the machinery parts is called as Lubrication.

While motor is running, there is a friction between the rotor and the shaft. To make the rotor to rotate easily and to avoid friction, bearings are provided on the two sides of the shaft on applying standard grease to the bearing the friction is reduced. If proper grease is not applied then heat is produced. This heat will effect both shaft and bearing and sometimes shaft won't rotate. Hence to avoid this fault a good lubricant should be used.

8.3.1. Aim of Lubricant

i) To rotate the shaft and bearings smoothly.

ii) To reduce heat and prevent power loss

iii) To avoid wear and tear,

iv) To remove the particles and dust that are created due to wear and tear,

v) To avoid vibration when the motor is on overload.

8.3.2. Lubrication types

Various methods of lubrications are:

i) Ring lubrication

ii) Vibrating Rod Lubrication

iii) Wick Lubrication

iv) Splash Lubrication

v) Greasing

vi) Oil Lubrication

vii) Greasing using gun

Though there are many types, grease and oils are widely used.

1. Oil

The two types of oil lubricants are plant oil and mineral oil. These are classified into many types under viscosity condition. In the place where there is low heat less vis cosity lubricant is used and where there is high heat, high vis cosity lubricant is used.

2. Grease

Mostly grease is made up of a mixture of soap and mineral oil different types of grease are manufactured by many manufactures. varieties of greases are avilable in the market. Note down the

places where the lubricant is to be applied in the motor and apply the grease according to the requirements.

8.3.3. Method of Applying Lubrication

Lubrication process may differ from place to place. Mostly two types are used. One method is applying Lubricant by hand to particular part of the machine and the other is applied through pressure i.e. automatically the grease applied to the machinery parts by pressure. The method of applying lubricant can be explained below.

8.3.4. Lubrication by grease cup method

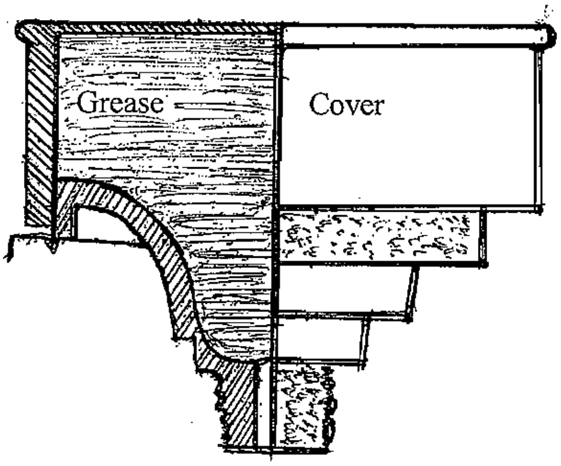

Fig. 8.3.4

The above figure shows the grease cup method. The inner tube of the cup is made up of cast iron or aluminium with a screwed cover at the top. The grease is filled inside the tube. A hole is provided at the bottom of the tube and is connected to the part which requires lubrication.

When the screwed cover is turned or twisted, the grease inside the tube will come out through the hole to the part connected with the hole by pressure. The grease can also be applied through grease gun.

8.3.5. Ring Lubrication

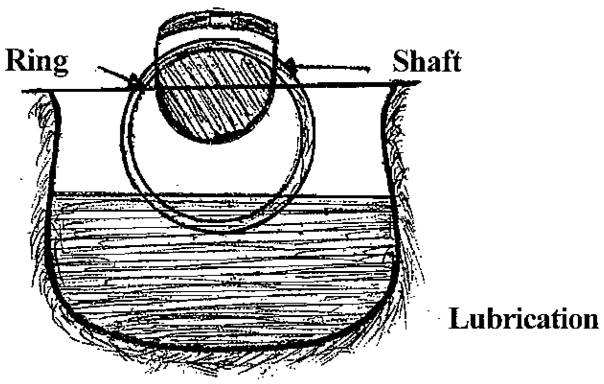

Fig. 8.3.5

The round shape ring is hanged down from the shaft where the lubrication is needed. The bottom of the ring is immersed inside the oil.

When the shaft is rotates fastly. the ring will move slowly on the shaft. while rotating the ring it will take some amount of Lubricant oil from the bottom to top.

When the ring comes to the top of the shaft, the oil from the ring will flow over the shaft and bearing. The remaining oil again flows down to the oil tank. By this method lubricant is applied easily to the shaft and bearing.

8.3.6. Diagram of oil Lubrication method

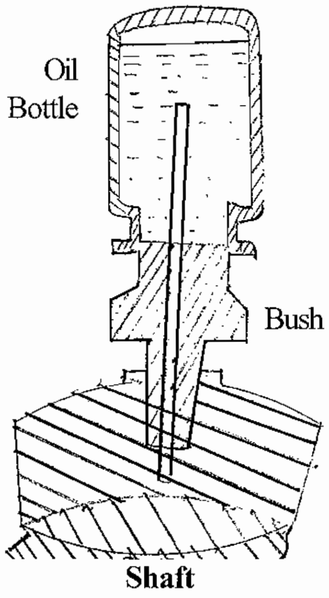

Fig 8.3.6

8.3.7. Diagram of wick Lubrication method

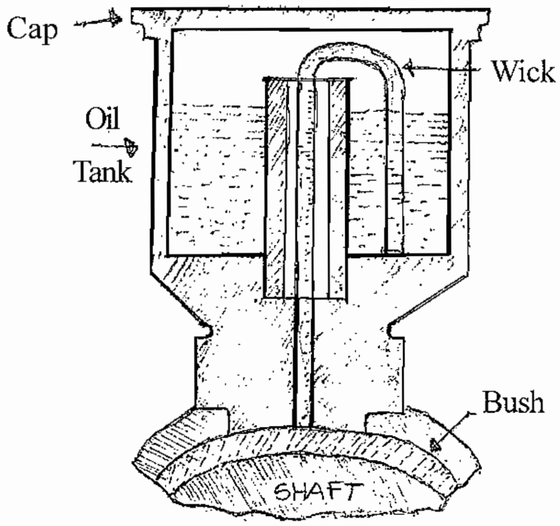

Fig 8.3.7

9. TRANSMISSION OF POWER

9.0. Introduction:

In factories and workshops the power or rotary motion from one shaft of the prime mover (motor, Engines) to another shaft of machine(Lathe, drill, pump etc) is usually transmitted by means of flat belts. V belts rope or chain running over pulleys keyed to the shafts. Power is transferred from one shaft to another shaft is called transmission of power.

9.1. Types of Transmission of Power

Transmission of power can be occured in different ways. They are classified into 6 types, They are

1. Belt drive.

a) Uncross Belt (or) Open Belt drive.

b) Crossed Belt drive.

2. Rope drive

3. Friction drive

4. Gear drive.

5. Chain drive

6. Coupling method.

9.1.1. Belt drive

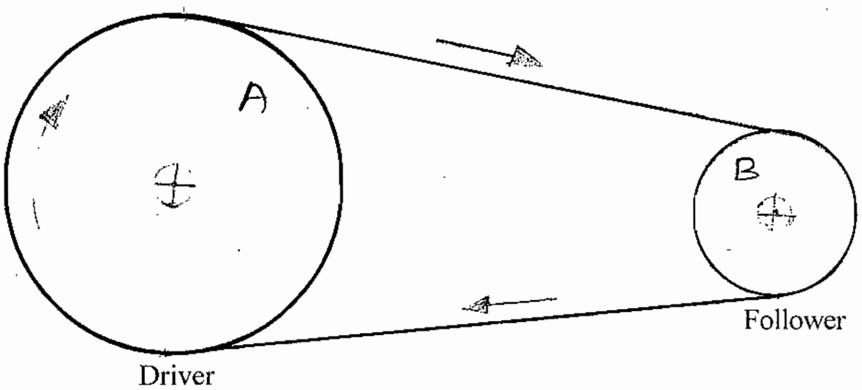

Fig 9.1.1.

The above fig shows a belt drive consisting of pulleys A and B. The pulley A is keyed to the shaft of the prime mover and is known as driver. The pulley B is keyed to the shaft of the machine intended to be rotated and known as follower or driven pulley. As the driver rotates, it carries the belt, due to frictional grip between its surface and belt.

The belt in turn runs over the follower pulley and starts rotating it by friction. The frictional grip necessary for the effective transmission of motion is increased by tightening the belt and increasing the contract area of the belt over the pulley circumference.

9.1.2. a) uncrossed Belt (or) Pen Belt

The open belt drive shown in fig below is used with pulleys connecting parallel shafts and rotation in the same direction. In this case the driver A pulls the belt from one side (Lower side) and delivers it to the other side (Upper side)

Thus the tension in the lower side of the belt is more than the tension in the upper side. The power side belt is known as tight side since the tension is more and the upperside of belt known as slack side because of less tension.

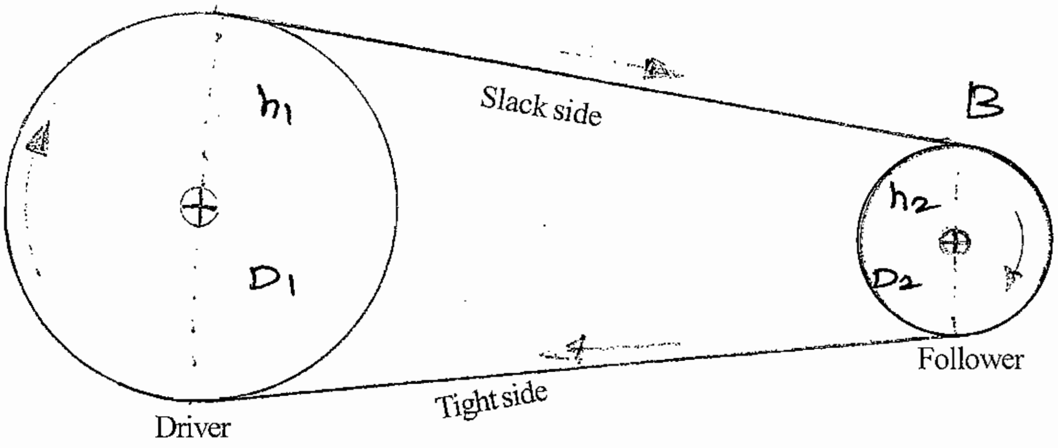

Fig 9.1.2

9.1.3. Cross Belt drive

The cross belt drive shown in fig, is used in pulleys connectin parallel shafts but rotating in the opposite direction.

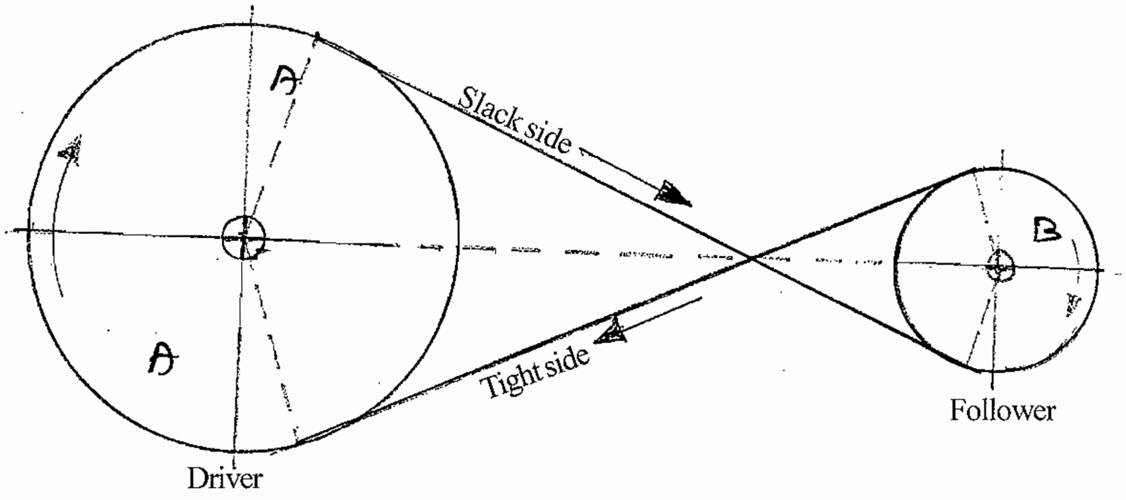

Fig. 9.1.3

The driver A pulls the belt from one side RQ and delivers it to the other side (LM). Thus the tension in the belt LM. The side of belt RQ is the tight side and the side of belt LM is the slackside.

9.1.4. Rope Drive

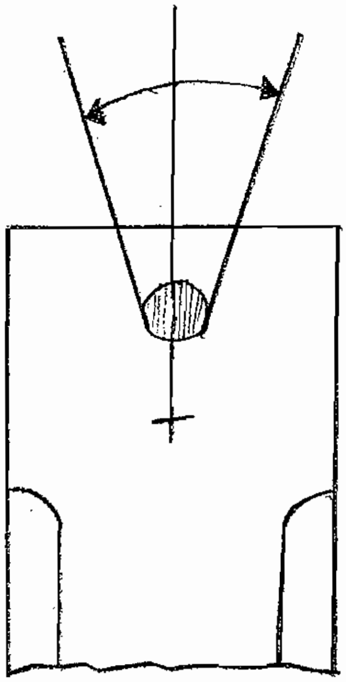

Fig. 9.1.4

The above fig. shows rope drive. in this drive a groove is cut on the rim of the pulley in which rope runs. The effect of groove increases the frictional grip and then reduces the tendency of slip.

Many grooves are cut on the rim of the pulley which may enable to more number of ropes used for transmitting the greater power.

9.1.5. Friction Drive

Friction is the key factor for power transmission one friction plate is fixed on the driver and movable friction plate is fixed on the shaft. The power is transmitted by the friction of these two plates. The friction is occurred by moving the movable friction plate to contact with the fixed friction plate. Ex.motors, Lorry and scooter engine. These friction plates are also called as "CLUTCH PLATE'.

9.1.6. Gear Drive

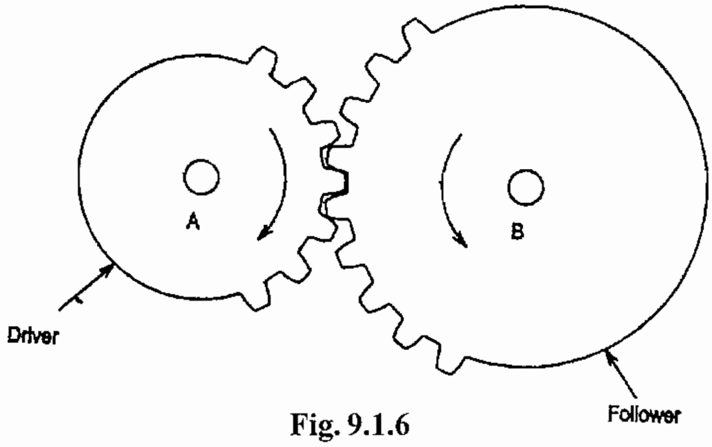

Fig. 9.1.6

In precision machines in which a definite velocity ratio is of importance the only positive drive is by means of gears or toothed wheels. A gear drive is also provided when the distance between the driver and the follower is very small.

In order to avoid the slipping a number of projections like teeth are provided on the periphery of the wheel 'A' (driver) which will fit into the corrosponding relesses on the periphery of the other wheel B (follower) as shown in below. Simply a friction.

9.1.7. Chain Drive

Power is transmitted from one shaft to another shaft by use of chain. The chains are arranged in such a way to fix in the teeth of socket wheel. This type is used for bicycle, Rickshaw and motor bike etc.

9.1.8. Coupling drive

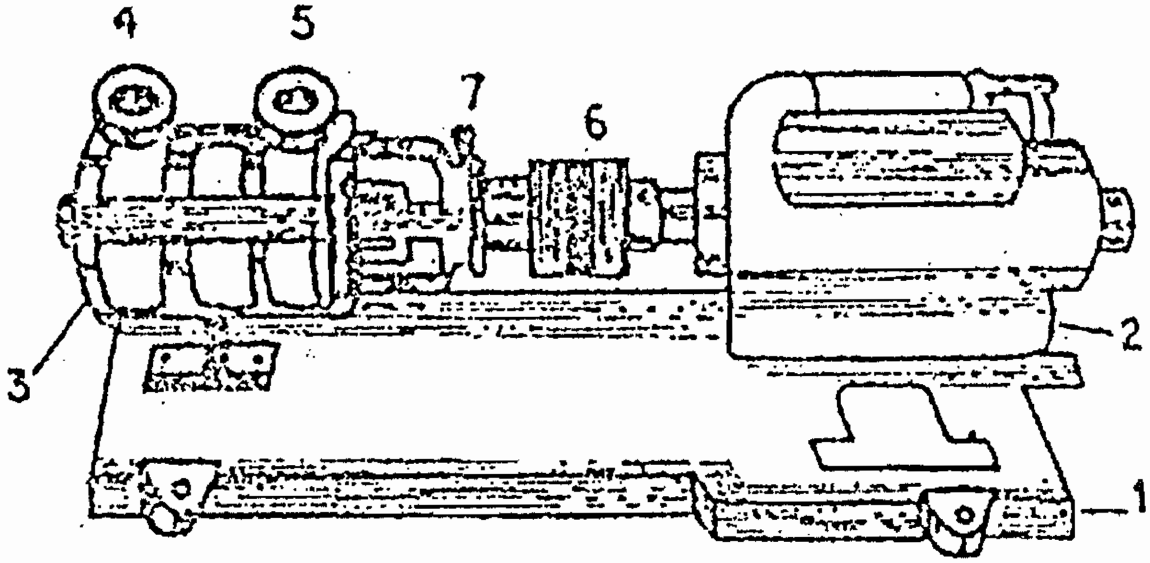

Fig. 9.1.8

The above fig shows the coupling method of power transmission. The driver and driven shaft is connected by proper coupling and the power is to be transmitted.

In water pump motor, the motor shaft and the impeller shaft is coupled by flange coupling.

9.2. Individual Drive

One motor is used for sinle machine for driving, this type is called Individual drive. The figure shows the diagram of Individual drive of power transmission system.

9.3. Group Drive

One motor is used for more than one machine for driving, then this type is called "Group Drive". The figure shows the structure of group drive for power transmission system.

Individual Drive

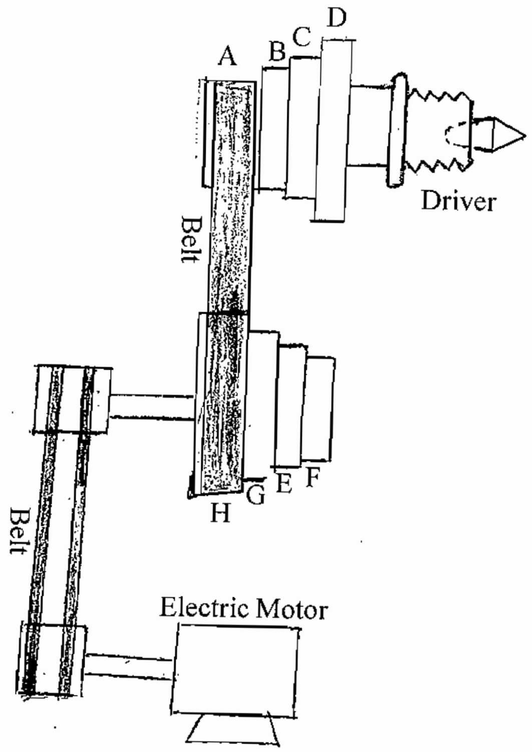

Fig. 9.2.

Group Drive

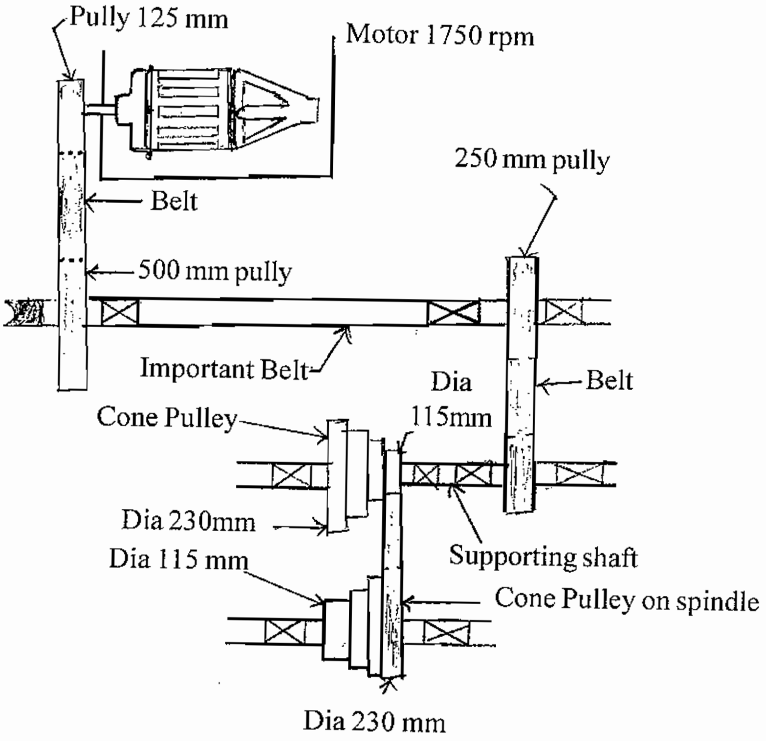

Fig. 9.3

QUESTIONS

Part A

I. Objective type multiple choice questions

1. Write down the shaft of prime mover name in the power transmission
   a) Gear b) motor c) drilling d) lathe
2. In open belt drive tension in the lower side of the belt is .... than the tension in the upper side.
   a) more b) less c) equal d) unequal.
3. Mostly friction drive is used in where.............
   a) Generator b) Transformer c) bikes d) None of them.
4. Chain drive is used in where....................
   a) floor mill b) lathe c) Grinding machine d) bicycle.
5. In water pump motor the motor shaft and the impeller shaft is coupled by................
   a) Chain b) Teeth c) flange d) belt.
6. Write down the other name of uncrossed belt drive?
   a) Crossed belt drive b) Open belt drive c) Friction drive d) None of them.

Part B

II. One Ward Questions

7. Write down the name of shaft of the machine intended to be rotated?
8. What is the other name of upper side of belt in uncrossed belt drive?
9. What is the name of cut on the rim of the pulley in which rope to run?
10. The friction plate is also called as?
11. In precision machines which type of drive in prefer for power transmission?

Part - C

12. What is meant by Transmission of power?
13. Write down the various method for transmission of power?
14. What is meant by chain drive?
15. Write short notes :- Friction drive.
16. What is meant by Individual drive?
17. What is meant by Group drive?

Part - D

18. Explain how the power is transmitted threw belt action?
19. Explain the method of Rope drive?
20. Explain the method of coupling drive draw the diagram?
21. Draw the diagram of group drive power transmission system mention their various parts:

Part - E

22. Explain the method of uncrossed belt and crossed belt drive of power transmission.
23. Explain with diagram the method of gear drive system?

10. METHODS OF CABLE JOINTS IN ELECTRIC CIRCUIT

10.1. Cable

Cable means any current carrying conductor either of solid or stranded section provided with overall insulation. The cable may also be constituted of one or more than one conductor section called "cores". Each core conductors is insulated individually and all cores and enclosed i.e., bunched together in one common mechanical protective covering or sheath. These type of cables are known an "Multi-core cable", e.g., two-core cable, three-core cable, three and half-core cable etc.

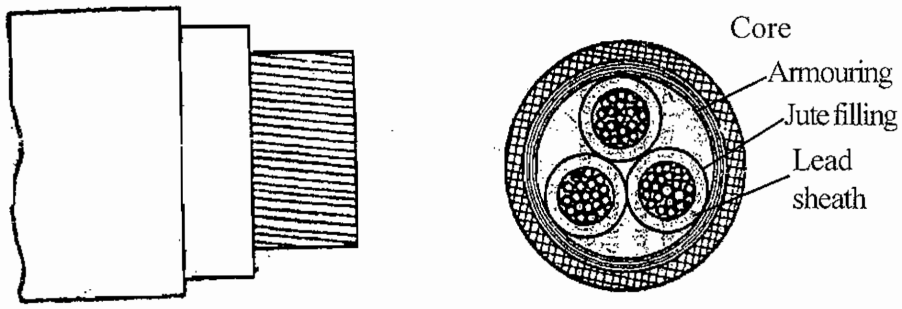

Fig. 10.1.

The cable normally consists of the following parts.

1. Conductor
2. Insulation over the conductor and insulating materials between various conductors in case of multi-core cable.
3. Overall protective covering against mechanical damage.

The power from generating stations can be transmitted by cables also. As seen already in comparison, the underground system is costlier and maintenance is difficult. Still, the system of transmitting the power by cables is preferred in thickly populated areas and cities.

The cables are usually classified according to the voltage for which they are manufactured. According to the voltage they can be classified as :

1. L.T. (Low Tension Cables) up to 1,000 volts.
2. H.T. (High Tension Cables) up to 11,000 volts.
3. S.T. (Super Tension Cables) from 22,000 volts to 33,000 volts.
4. Extra High Tension Cables from 33,000 volts to 66,000 volts.
5. Oil-filled and pressure and gas pressure cables from 66,000 volts to 1,32,000 volts.

10.2. General Construction of paper-insulated Lead Covered Cables

a) Core : All cables have one central core or a number of cores of stranded copper or aluminium conductors. Generally, there are one, two, three or four cores (three and a half).

b) Insulation : The different insulations used to insulate the conductors are paper, varnished cambric and vulcanized bitumen for low voltage. But mostly impregnated paper is used which is an excellent insulating material. When varnished cambric is used as an insulating material for low voltage cables, petroleum jelly is applied between the layers of the cambric type which prevents damage to the insulating tape by friction when the cables are handled.

c) Metallic Sheath : A metallic sheath is provided over the insulation so as to prevent the entry of the moisture into the insulating material. The metallic sheath is usually of lead or lead alloy.

d) Bedding : Over the metallic sheath comes a layer of bedding which consists of paper tape compounded with a fibrous material. Also, sometimes jute strands or hessian tape (strong coarse cloth of hemp or jute) is also used for bedding. The purpose of providing the bedding is to protect the metallic sheath from mechanical injury from the armouring.

e) Armouring : Armouring is provided to protect from mechanical injury to the cable and it consists of one or two layers of galvanished steel wires of two layers of steel tape.

f) Serving : Over and above armouring, fibrous material is again provided which is similar to that of bedding but is called as serving.

Types of 3 phase cables

- The following are types of 3 phase cables.

10.3. Belted Cables

Fig. 10.3. represents the 3-core belted cables in which case each of the conductors is insulated from the other with impregnated paper. Surrounding the three conductors is again provided a belt of paper and the interstices between them are filled with fibrous insulating material. In such cables each core may have conductors of different diameters so arranged as to form a sector shape in order to avoid the undue waste in the cable. Over belt is provided a metallic sheath, then a layer of braiding armouring and finally serving. These types of cables are used upto 11KV Voltage sometimes it is used 22KV voltate transmission.

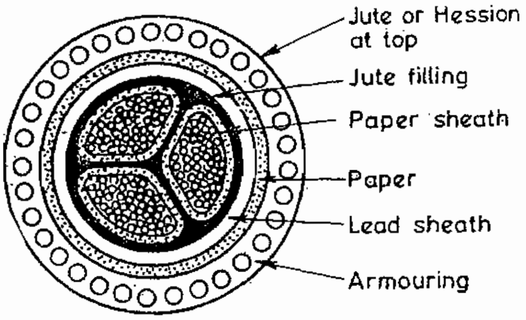

Fig. 10.3

10.4. H-type cables

The H-type of cable has no belt insulation, but each of the conductors is insulated with paper to the desired thickness and over this is provided a layer of metalized paper, perforated to facilitate the process of impregnation. The fibrous material in the centre the along the filler spaces gives the round

shape to the cable. Over this comes the cotton woven tape so that the lead sheath, the binder of the metalized foil is all at earth potential. Then layers of braiding, armouring and serving are provided as in the previous case.

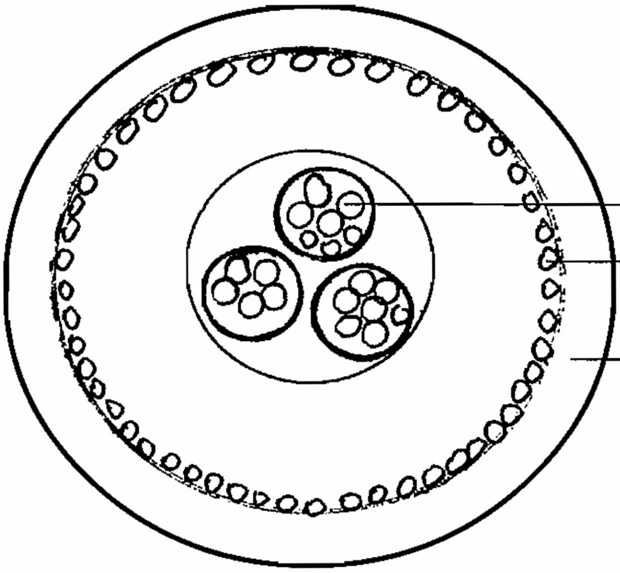

10.5. S.L. Cable

In case of S.L. cables the individual conductors are first insulated with impregnated paper and are covered with a metallic sheath after which they are laid up and armoured. Note that there is no lead sheath over and above all the three cores.

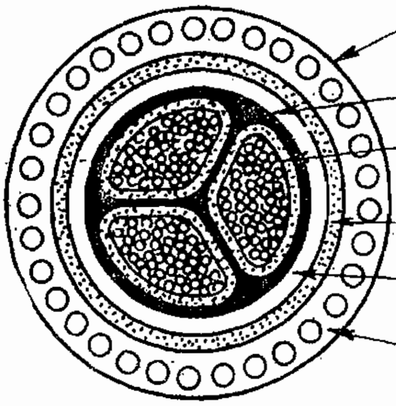

10.6. H.S.L. Cable

Such a cable is combination of B-type and S.L. type.

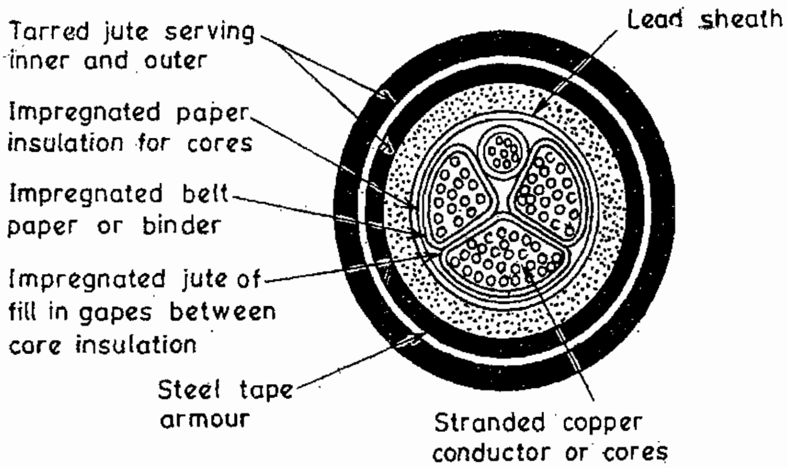

10.7. METHODS OF CABLE JOINT

Cable jointing of Straight Trough Joint

The cable jointing is a very skilled job and requires special care. A faulty joint results in short circuit, leakage current and high maintenance cost.

Jointing Operations : The following steps explain the various operations usually carried out in cable joining.

10.7.1. Step 1

Centre Making. The cables are laid in the joint box base touching each other allowing 3" overlap on each and from centre of joint.

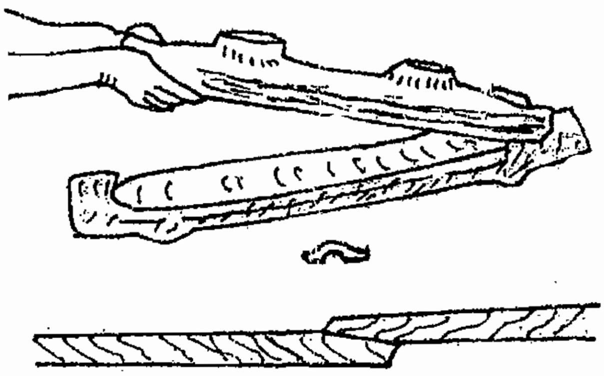

Fig. 10.7.1.

10.7.2. Step 2

Removing of Armour. Scrap off the jute binding of the cable upto the wire tape and place again the cable ends inside of the box and mark points on either inner side at 6 cm (¼ ") from the grand end wound wires at these marked points also. Now with the help of a Hack saw cut off the lead sheath from

free ends of the cables to the armour marked end, taking care not to damage insulation over the insulated core conductor of the cable.

10.7.3. Step 3

Removal of lead sheath.

(i) Wrap a sufficient length about 0.75 m (3 ft.) of cable either with clean paper or cloth.

(ii) Prepare lead sleeve for plumbing and come down one end to a diameter sufficient to allow sleeve to slip over cables.

(iii) Slide lead sleeve over this wrapping, taking care than inside of sleeve is quite clean to slip it over cable and hole for pouring compound in the sleeve is facing downward.

(iv) Mark off and cut back lead sheath allowing 2.5mm. (1") to project inside sleeve at each end, do not cut too deeply and damage cable papers, while removing lead pull outward.

(v) Put plumbing ring in the proper places over the lead sleeve and tight them at 25 mm. (1") distinct from the lead sheath ends.

10.7.4. Step 4

Removal of Insulation

i) Wrap cotton tape over each core and belt papers, wrapping in the direction of the lap of the core papers, leaving 50 mm. (2") at the end of cores untaped.

ii) Place spreaders between the various core sections and remove each core's paper insulation up to half length plus 19 mm . (¾") more than the (sleeve) ferrule length.

10.7.5. Step 5

Soldering

i) Tin each conductor thoroughly.

ii) Fit grip type jointing sleeves over conductors and grip them together with gas plier, so that conductors but at the centre of sleeve.

iii) Pour the molten solder with the help of pot and ladle, using flux over the end gaps. Allow the solder to cool and form a perfect joint.

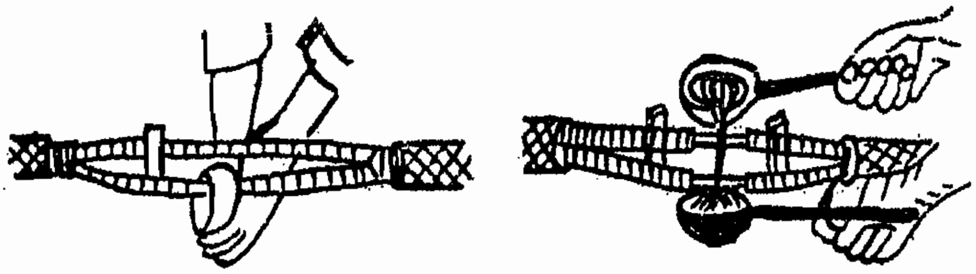

Fig. 10.7.5. (a)

iv) The excess solder solidified over the sleeve (ferrule) should be removed with the help of a sharp knife or sand paper as shown in fig.

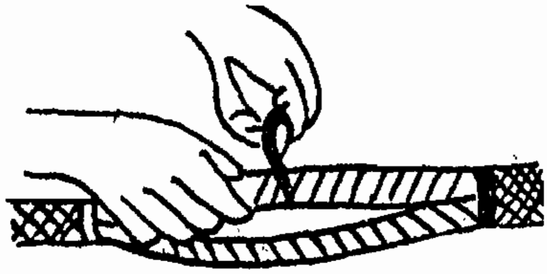

Fig. 10.7.5. (b)

10.7.6. Step 6

Insulation the Joint

i) Due to the heat of molten solder the cable insulation close to the joint section either gets burned partly or totally damaged. For this reason chip off this insulation upto 12 mm (½") length from the jointed section.

ii) Wound impregnated paper tape with a half lap over the bare section along with the sleeve (ferrule) portion so as to form over-all width equal to it 1½ times that of the cable core insulations as shown in fig.

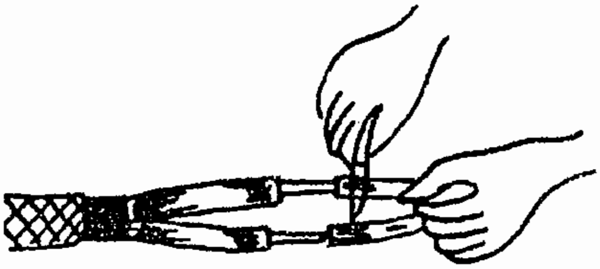

Fig 10.7.6. (a)

iii. Remove the spreaders placing triangular shaped, paper separator between core-section. This is done by pressing two limbs of separator together and inserting them between two of the cores, allowing limbs to return to their normal position across the third core when separator is finally inserted, as shown in fig.

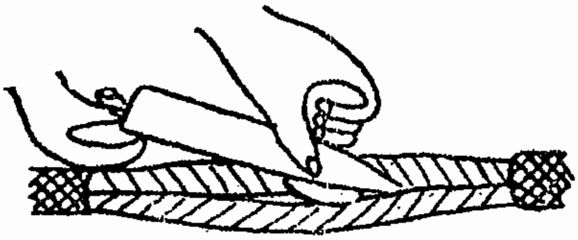

Fig. 10.7.6. (b)

iv. Wrap outer impregnated paper binder over joint with separator in position and finally with cotton tape.

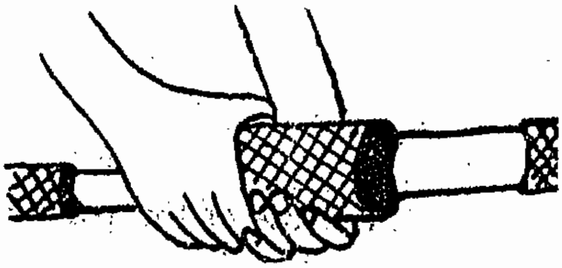

Fig. 10.7.6. (c)

10.7.7. Step 7

Plumbing of Lead Sleeve

i. Bring the lead sleeve over the jointed sections by sliding gradually.

ii. Heat the taped joint to remove the moisture.

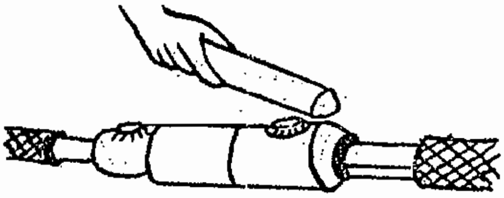

Fig. 10.7.7. (a)

iii) Slide the plumbing rings over the free ends of the lead sleeve. If plumbing rings are not used, then the free ends of the lead sleeve should be bent so as to make good contact with the lead sheath of the cable.

iv) Tin the end of the lead sleeve when the wipe is to be formed and make the plumbs by pouring molten solder.

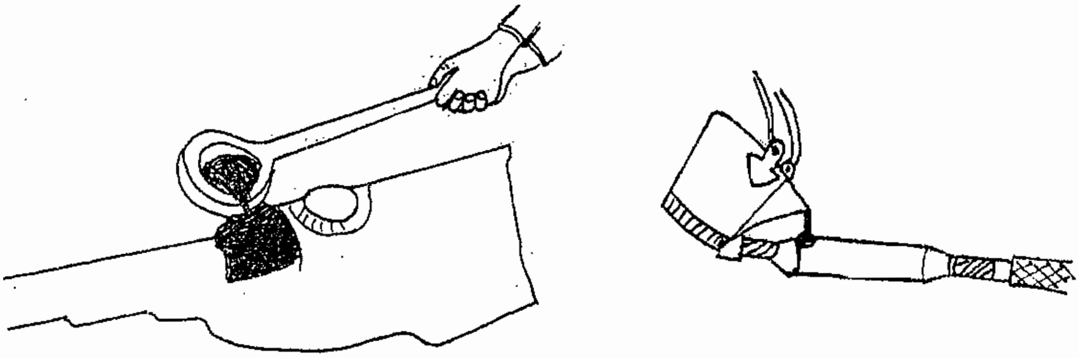

Fig. 10.7.7. (b) and (c)

v) In good plumbing the thickness of the plumbing material layer deposited should be of uniform thickness all around and neat in appearance.

vi) Fill the lead sleeve with compound, when sleeve is full; continue to pour more compound until it overflows through vent holes and until bubbling ceases. This will indicate that all air is expelled out.

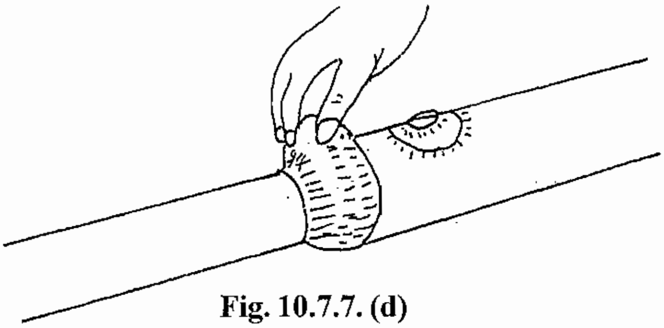

Fig. 10.7.7. (d)

10.8. Step 8

Box Assembly

i) Place in position the joint, taped, plumbed cable section in the base of the box with armour clamps shown in

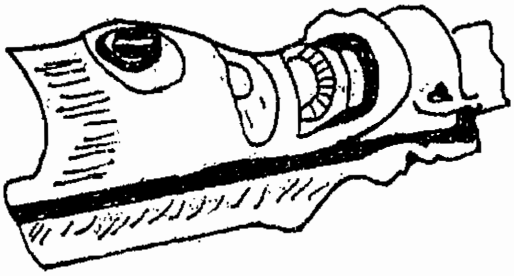

Fig 10.8.1. (a)

ii) Tight the armour clamps firmly.

iii) Fill the compound in the grooves of joint bottom half of

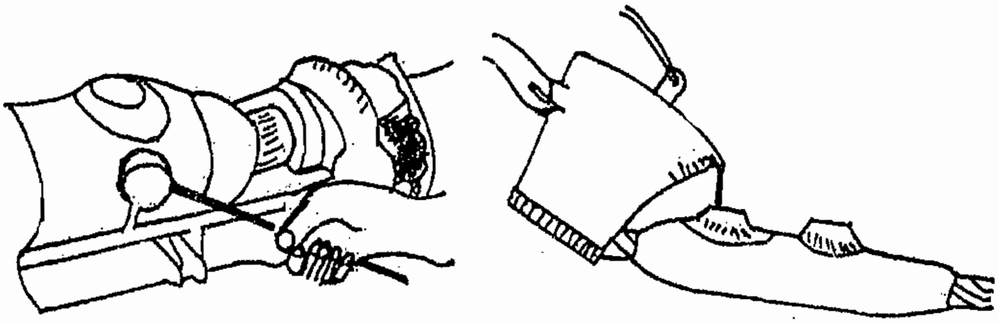

Fig 10.8.1. (b) and (c)

iv) Place top half of the box in position and bolt up.

v) Warm box with a blow lamp and fill the compound.

vi) Tight finally all the bolts. The straight joint is ready.

Fig 10.8.1. (d)

10.9. Cable jointing of Tee joint

Use: Tee joint is used for taping and serving connections.

10.9.1. Jointing operations.

The following steps explain the various operations for cable jointing.

1. Remove top half of tee box.

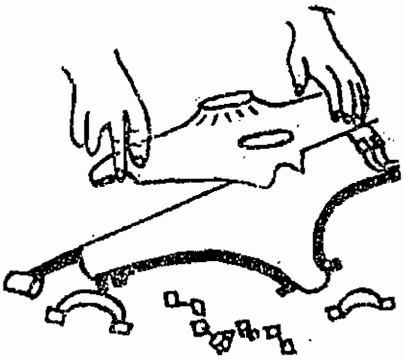

Fig. 10.9.1. (a)

2. Lay cable in position, as shown

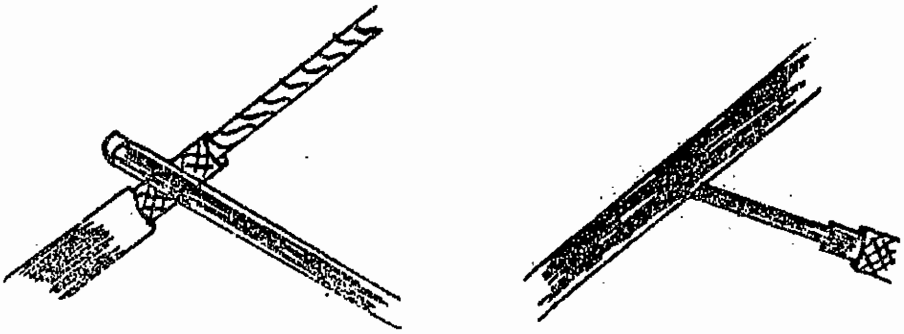

Fig 10.9.1. (b) and (c)

3. Mark off cable, by placing lower half of the box in position around around serving of service cable stip.

4. Place wire binder around serving or service cable. Strip off serving from armouring and mark armouring.

5. Remove armouring form service cable, see Fig

6. Mark off lead sheath, cut through and remove carefully. Lead sheath of service cable.

7. Peace wire binder around serving of main cable. Strip off serving. Mark off armouring and remove armouring and serving.. Mark cut through and remove lead sheath.

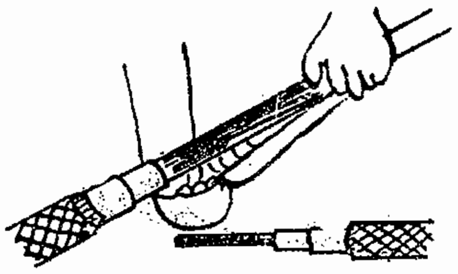

Fig. 10.9.1. (d)

8. Remove belt papers from service cable and splay out the cores. Tap the cores with impregnated cotton insulating tape.

9. Remove belt paper at about 25cm. (1") at each end of lead sheath and insert wood wedge in main cable,

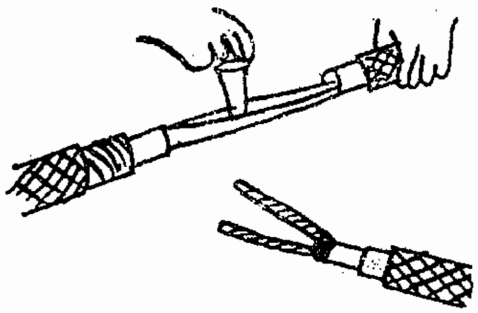

Fig. 10.9.1. (e)

10. Bare the conductors of main cable, to which the service is to be connected, and make the service connection,

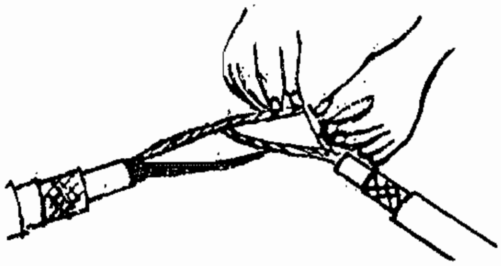

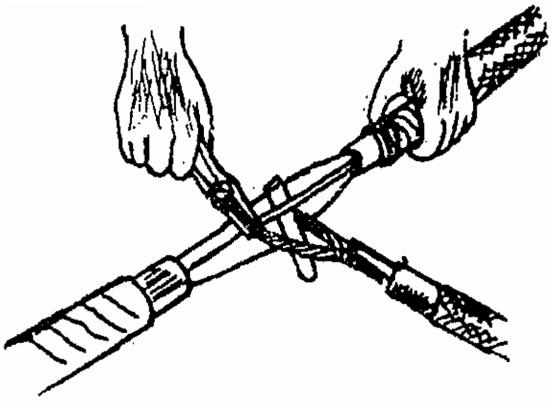

Fig. 10.9.1. (f)

11. Solder the joint

12. Wrap lead strip on the lead sheath of cable, so that its diameter is more than the maximum diameter of the box.

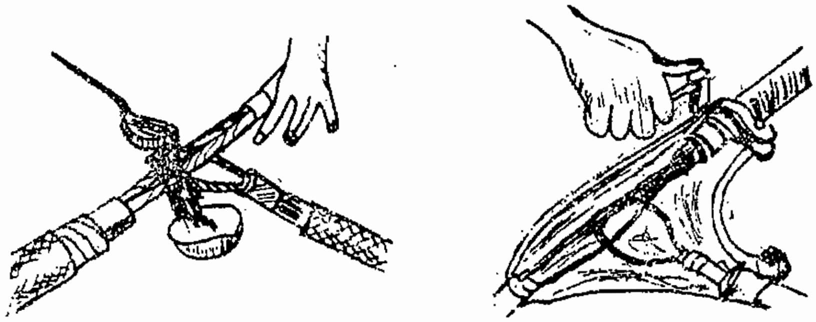

Fig. 10.9.1. (g) and (h)

13. Place the joint in cast iron box and tight the armour grips.

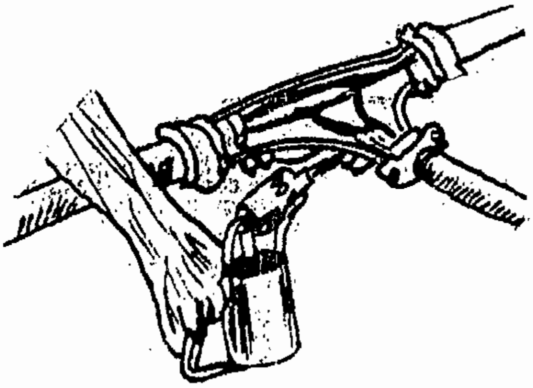

Fig. 10.9.1. (i)

14. Warm the lower half of the box, and fill compound in the grovers of box.

15. Place top half of the box in position, tight the bolts and fill the gland with compound.

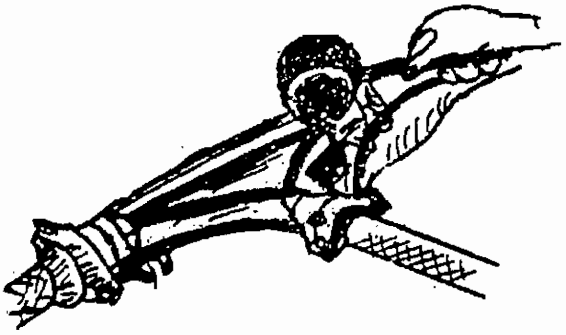

Fig. 10.9.1. (j)

16. Fill the box with bitumen compound, allow the compound to cool.

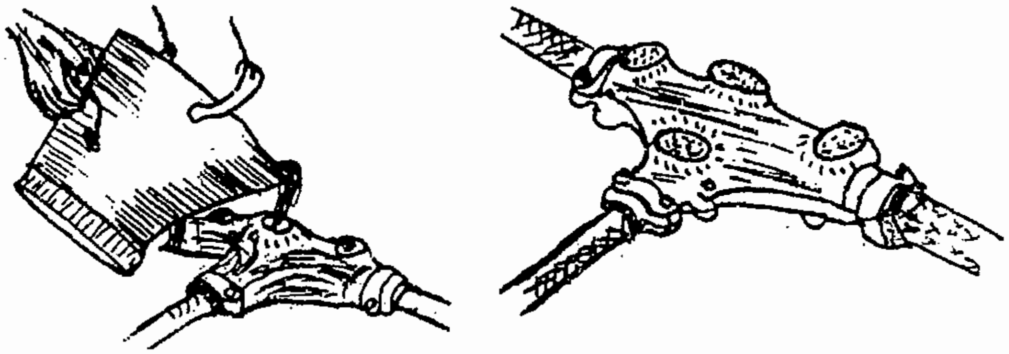

Fig. 10.9.1. (k) and (l)

17. Seal the box, the "Tee Joint" is ready.

General Specifications of Cable

i. Type of conductor used in cables (copper or aluminium)

ii. Number of cores that cable consists of (e.g. single core, twin core, three core, etc).

iii. Voltage grade (240/415V or 650/1100or)

iv. Type of cable with clear description regarding insulation, shielding, armouring braiding etc.

10.11. Soldering

Soldering is the process of jointing metal sheet (Such as tin, galvanized iron, copper sheet etc.) with an alloy whose melting is less that of the materials to be soldered. The alloy used for joining the metals is called solder. (The most common solder is composed of 50 percent lead and 50 percent tin. Its melting point is about 10 percent that of copper.

10.12. Material used for soldering

The composition of the fine solder (soft solder) is tin 60 and lead 40. Its melting temperature is 190c and is widely used by tin men and radio-mechanics.

10.13. Flux for soldered.

For proper soldering flux is to be used. In soldering process, the application of flux serves to remove oxides from the surface to be soldered. They deoxidize the materials at the time the soldering element is added. For ordinary soldering zinc chloride is a common flux. Tallow or olive oil may also be used for soldering. Flux is also sometimes incorporated in solder wire itself. In such a case no extra flux is necessary. Than that wire is called resin cored solder.

10.14. Construction of soldering:

The soldering iron has five main parts i) Handle ii) Element iii) Body iv) soldering bit v) connecting lead.

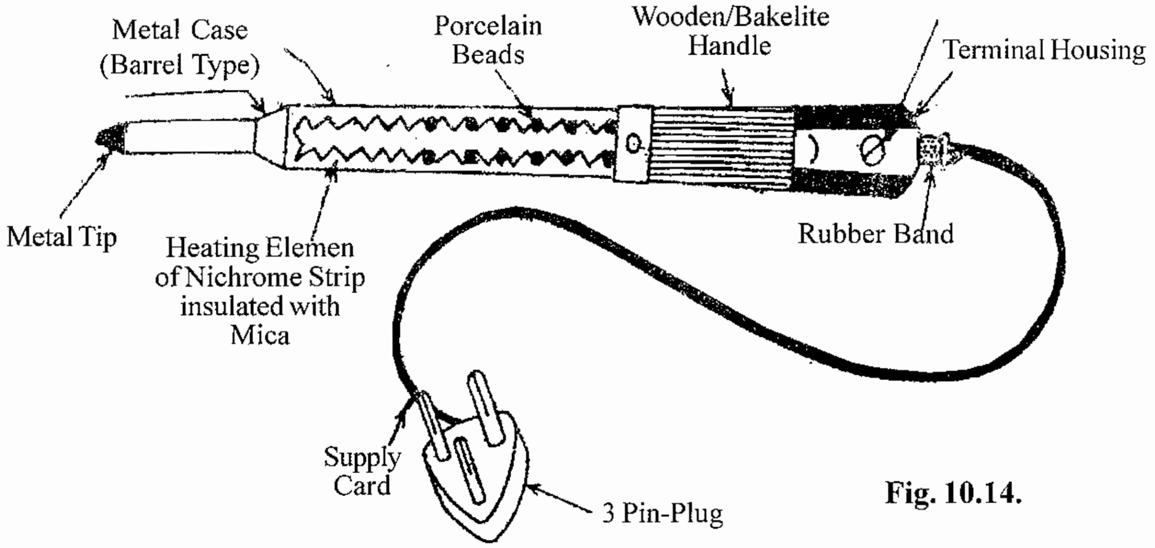

Fig. 10.14.

10.1.5. Techniques of soldering

There are 3 ways to perform good soldering. They are.

1. Tinning the soldering Iron
2. Applying the flux
3. Applying the solder.

10.15.1. Step:1- Tinning the soldering Iron

Preliminary in the soldering, the soldering iron or the bit must be coated with solder and this operation is known as tinning.

To tin soldering bit, heat it until hot enough to melt a stick of solder rapidly, when it is lightly pressed against it.

When hot enough, clean up the surface of the bit with an old file.

If the temperature be too high the copper surface of the bit will be found to tarnish immediately in which case the soldering bit must be allowed to cool slightly and the cleaning be repeated. When the surface tarnishes slowly, it is at the right temperature for tinning.

Take a piece of tin plate and place on it some solder and flux and rub the bit on the same.

After the molten metal has spread over the whole of the surface which is desired to tin the super fluous solder is wiped off with a clean damp rag the surface should present a bright silvery appearance when properly tinned.

10.15.2. Step:2- Applying the flux

The resin which in recommend as flux may be sprinkled over the surface to be soldered or may be applied in liguid form by dissolving in alcohol in the liguid form it may be applied with a brush shown in fig below.

10.15.3. Step:3- Applying the solder

The methods used in applying the solder to the part to be soldered depends upon the nature of the work- It may be applied by 2 method, they are,

i) picking up and

ii) melting on the work. Method.

1. Picking up method

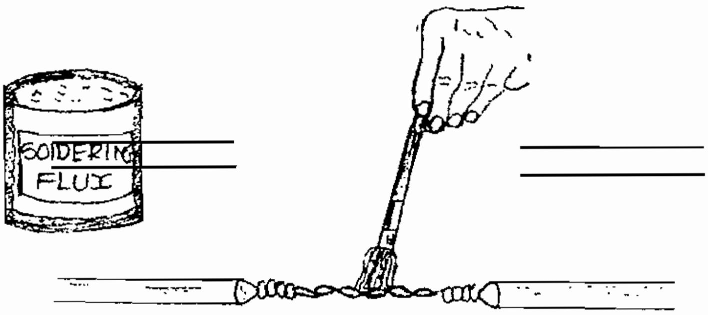

Fig. 10.15.3. (a)

The above fig shows the picking up method. For soldering small wires, this method is used. The solder is picked up with a hot bit and then applied to the Joint .

2. Melting on the work Method

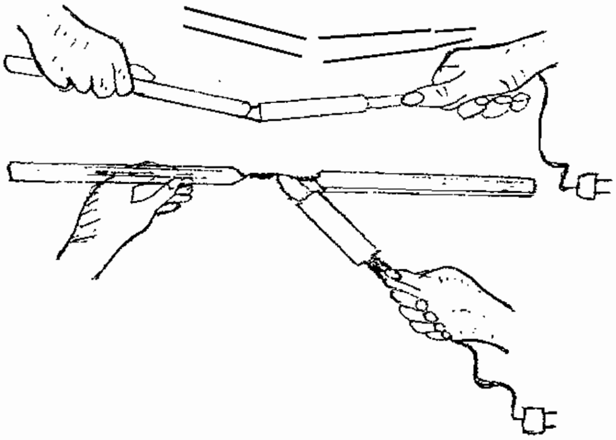

Fig. 10.15.3. (b)

The second method of melting the solder on the work is that the solder stick is held on top of the work piece.

The bit is more efficiently applied from below, as it allow the heat to rise melting the solder and allowing it to flow in to the crevices. When it is found impossible to apply the heat from below, the soldering copper may be placed at the top as shown in below figure. In which case it will be necessary to in crease the heat of the copper.

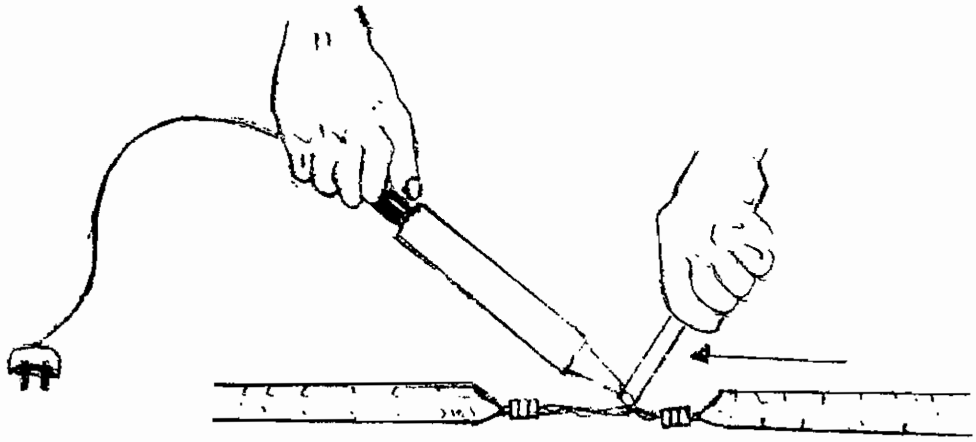

Fig. 10.15.3. (c)

10.16. Bracing

Definition

Metals are Joined by using filler metal. The temperature of the filler metal is less than the temperature of Joining metals and the Jointing metals have higher melting point. That is above 500c is called bracing. Bracing connections are used for good conduction, good mechanical strength, for a long period, and also withstand the vibrations.

10.16.1. Method of bracing

In squirrel case rotor, the straps inserted in the outer surface (periphery) are connected to the rings provided on the two sides by using bracing method. In armature, thick conductor are connected to the commutator by bracing method.

QUESTIONS

Part A

I. Choose the Correct Answer

1. Generally .... type of conductors are used inside the cable.

   a) Brass　b) Iron　c) Copper　d) Silver

2. The Colour of cabel structure is ....

   a) Brown　b) blue　c) black　d) Grey.

3. Mostly underground cable laying is suitable for ....

   a) Rural　b) city　c) forest　d) Tunnel (or) mines

4. Soldering process is related to ....

   a) Electrical　b) electronic　c) computes　d) Aeronatic.

5. Generally .... metal is used for soldering lead.

   a) copper　b) Zinc　c) Aluminium　d) Tin.

6. The melting point of bracing is above................

   a) 300°C　b) 400°C　c) 500°C　d) 600°C

Part B

II. One ward Questions:-

7. 'Cable' means a lenth of insultated conductor True/False.
8. What type of insulation are covered on the cable?
9. What is the preliminary operation should do for before soldering?
10. What is the recommended name of flux for soldering use?

Part - C

III. Answer the following questions in briefly

11. What is meant by cable?
12. Write down the general specification of cable.
13. What is meant by soldering?
14. What do you meant by the process of 'Tinning'?

Part - D

IV. Answer the following questions in one page level

15. Draw the explain the structure of 3 core weather prof cable.

16. What is meant by bracing explain the method of bracing?

Part - E

V. Answer the following questions in two page level

17. Explain with neat sketch methods of cable joint connection?

18. Explain the construction and various techniques of soldering process?

1. ENGINEERING DRAWING AND IMPORTANANCE OF DRAWING

1.0. INTRODUCTION

Engineering Language is known as Engineering drawing. It is a way through which engineers can communicate their deas, designs and thoughts to others. Creative ideas of engineers are recorded by means of Engineering drawing. Drawing is the foundation for all the engineer. And it is a universal language of engineering It is used for a graphical representation of the size, shape and allowances of any object.

METHOD OF EXPESSION

1) Free hand sketching.
2) With Drawing instruments.
3) By computers.

DRAWING INSTRUMENTS

Drawing Instruments are used to prepare drawings accurately and easily. The accuracy and quality of drawing depends upon the accuracy and quality of drawing instruments.

The following classifications are in the drawing instruments in accordance with their uses.

i) Basic Tools

Drawing Board, Drawing paper, Pencil, Eraser and drawing pins or tape and clips, duster sand paper Black Tools For Drawing Straight Lines

T-square and set square, Mini drafter, scales. Tools For Curved Lines

Compass, French curves and Templates Tools for Measuring Distance and angles

Dividers, scales and Protractor.

1.1. DRAWING BOARD

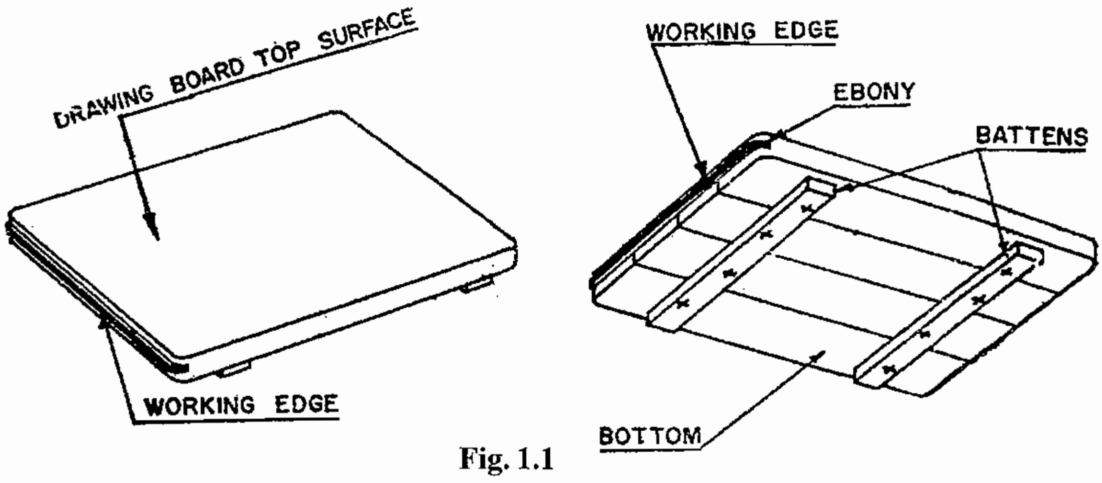

Fig. 1.1

It is rectangular in shape. 25mm thick well reasoned soft wood strips are used for making the drawing board. The strips are joined to gather by two battens at the back in order to prevent warping. On the left side an ebony edge is fitted on which T-square is made to slide. This edge should be perfectly straight and is called as working edge. For using the drawing board it kept in such-a-way that ebony edge should be on the left hand side of user and drawing paper/sheet attached from extreme top right hand side of corner. So that enough space could be available for moving the drafting machine.

The standard size of drawing boards recommended by ISI are given below.

SI.No.	Designation	Dimension in MM	Name
1	BO	1500 x1000	Antiquarian
2	Bl	1000 x 700	Double elephant
3	B2	700 x 500	Imperial
4	B3	500 x 350	Half - imperial
5	B4	350 x 250	Quarter - imperial

1.2. DRAWING SHEET / PAPER

Normally thick white drawing sheets are used. Firmly affix the paper to the drawing board with the help of drawing pins or clip.

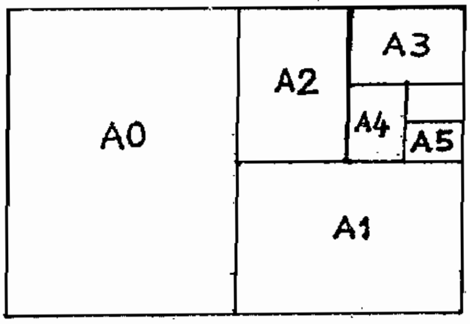

Fig. 1.2

The following are the size of drawing sheets according to ISI 696 - 1972. Students are usually used A2 size drawing sheet.

SI.No.	Designation	Trimmed (M.M) Width x Length	Untrimmed (M.M) Width x Length
1	A0	841x1189	880 x 1230
2	Al	594 x 841	625 x 880
3	A2	420 x 594	450x625
4	A3	297 x 420	330 x 450
5	A4	210 x 297	240 x 330
6	A5	148 x 210	165 x 240

1.3. DRAWING SHEET LAYOUT

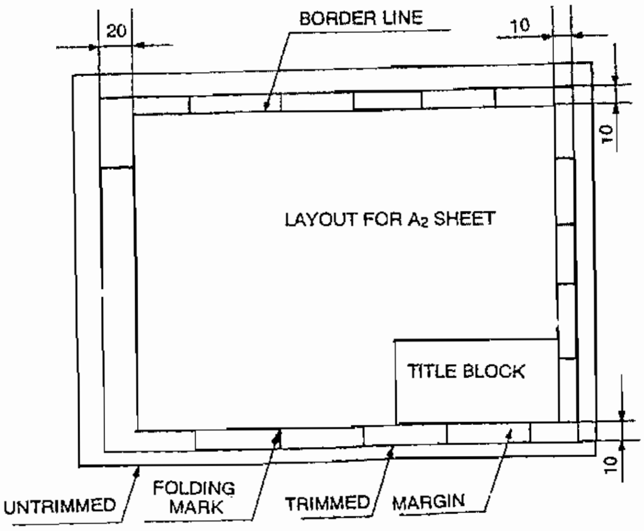

Fig. 1.3

For giving pleasing appearance, every drawing must have a layout. The layout should facilitates, easy reading of the drawing, easy locating of essential references. It includes all the necessary information, sufficient extra margin for easy filling and binding of drawing sheets.

Neatly fold the finished drawings and place them in and envelope type card board box instead of rolling them.

1.3.1. DRAWING PENCILS

The appearance and accuracy of a drawing depends very much on the quality of the drawing pencils. The grade of the pencil lead is usually indicated by letters and figures at one and of the pencil. The grades B, 2B, 3B 7B indicate H, 2H 3H-indicate the degree of hardness in an increasing order.

HB grade is used for marking arrow-heads, thick free hand sketching, thick out lines. Like border lies or margins, H for out line of visible lines, and dimensioning. 2H for construction lines and hidden lines.

1.4. DRAWING PINS, U CLIPS AND CELLO TAPE

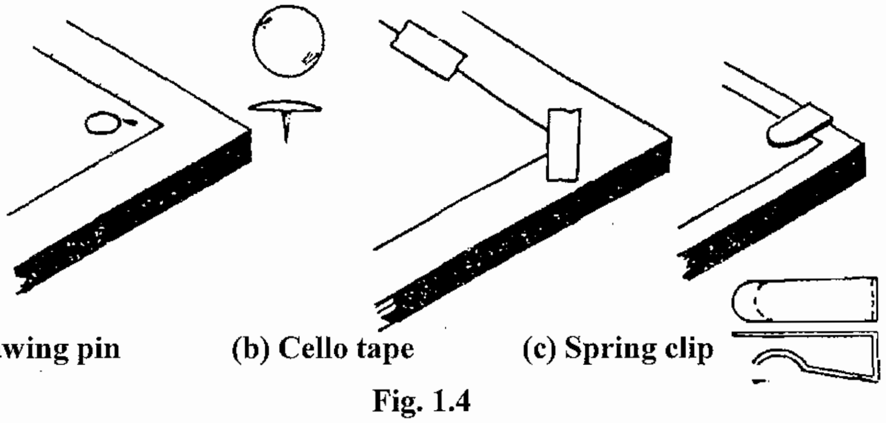

(a) Drawing pin (b) Cello tape (c) Spring clip

Fig. 1.4

Drawing pins are used for fixing the drawing sheet on the drawing board. It consists of a head plated with mild steel or brass and a needle part made of steel. Pins should be so inserted on board that the pins heads sit on the surface of the drawing sheets.

U clips one used for fixing the drawing sheet on the drawing board.

Now a days, cello tapes are used in place of drawing pins for its practical convenience as the drafting machine, T-square and set square can be moved very easily over the tape.

1.4.1. ERASER

It is made of soft India- rubber and is used for removing lines drawn by mistake or over dimension etc. Its use should be such that it should not spoil or damage the surface of the paper. Frequent use of eraser shall be eliminated.

The eraser shield is a thin sheet which is used to prevent erasure of correct lines vearer to the wrong lines which are to be erased. Duster

The duster should be preferably of towel cloth or handkerchief used for cleaning drawing instruments and materials, before starting the work. The rubber crumbs formed after the used of eraser should be removed by duster and not by hand.

1.4.2. SAND PAPER BLOCK

For sharpening the pencil by sand paper block pull and roll your pencil on the sand paper block 5No. designation sand (emery) paper are used in the common applications. Sometime zero grade sand paper are used.

1.5. T-SQUARE

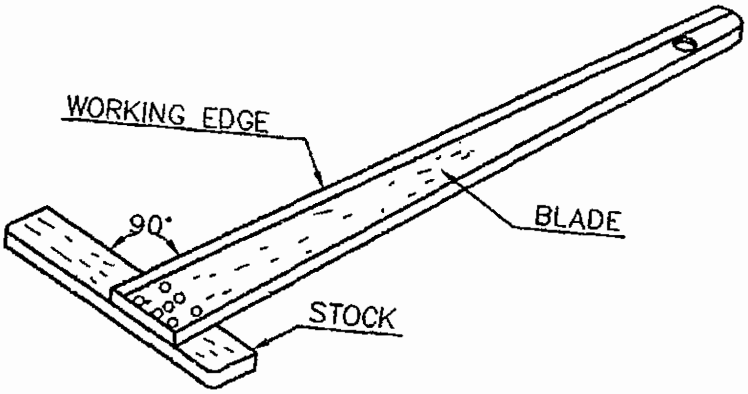

Fig. 1.5

The stocks and the blade are the two parts of a T-square and these two parts are joined together at right angles to each other by means of screws and pins. T-square should be made by hard quality wood. The blade lines on the surface of the drawing board. The stock is placed adjoining the working edge of the drawing board and slide on it when required. The T-square is used for drawing horizontal lines.

1.6. SET SQUARES

Set-squares

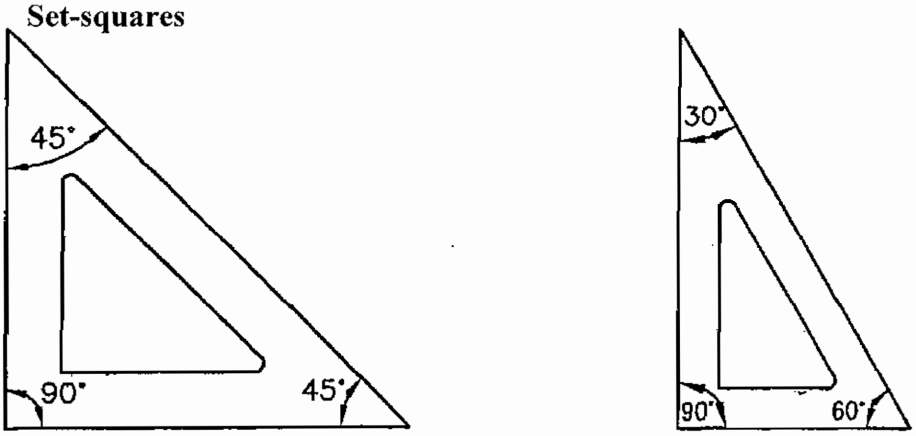

45° Set-square **30° - 60° Set-square**

Fig. 1.6

The set squares are made of transparent celluloid or plastic. Generally two forms of set squares are used for drawing and they are triangular in shape. One corner in each setsquare is a right angle, 45° set square and 30° - 60° set square are the two forms.

Set squares are used for drawing all straight lines. Vertical lines can be drawn with the both set squares along with the T-square.

Lines with an angle of 15°,300,450,60°,750 etc can be drawn with the combination of set square and T-square.

1.6.1. MINI DRAFTER

Mini drafter is used for faster drawing work. It serves the combined purpose of T-square, set square, protractor and scales. Drawing of horizontal, vertical, inclined, perpendicular and parallel lines are done quickly by mini-drafter.

1.6.2. SCALES

Scales are used to transfer the dimension of the object to the drawing. They are made of steel, wood, celluloid or plastic, card board. The scale are usually about 1MM thick and scales of grater thickness have beveled longer edges. Both the longer edges of the scales are marked with divisions of centimeters (CM) and millimeters (M.M).

The scales for general engineering drawing are

a) Full scale : 1:1

b) Reducing scale : 1:2, 1:5, 1:10, 1:100

c) Enlarging scale : 10:1, 5:1, 2:1.

1.7. COMPASS

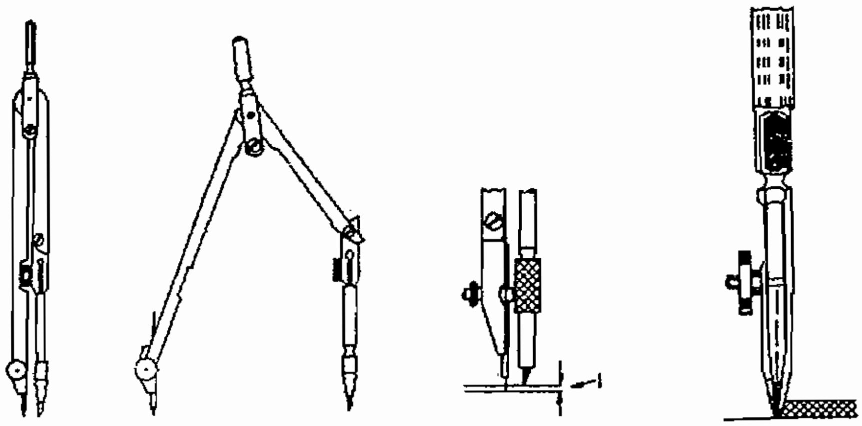

Fig. 7

The compass is used for drawing circles and arc of circles to the required dimensions. Compass consists of two legs, which are pivoted at the top end. In the lower end of the one leg has a pointed needle fitted to it and end of the other leg is used for inserting a pencil lead. The pencil leg lower part is detachable and an in king pen attachment can be fixed to it.

Up to 150 mm diameter circles can be drawn with the legs of the compass kept straight and for drawing larger circles the lower part of the pencil leg is removed and lengthening bar is attached in the pencil leg place. The pencil leg part is then fitted at the end of the lengthening bar, thus in creasing the length to of pencil leg.

1.8 FRENCH CURVES

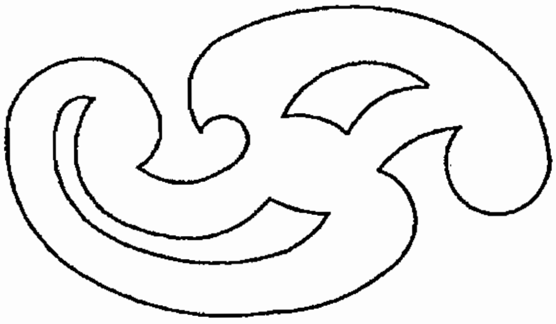

Fig. 1.8

French curves are made of wood, celluloid or plastic and of various shapes. French curves are used for drawing curves other than circular arcs, which cannot be drawn with a compass. French curves are sometimes cut in the middle of set square (30°-60°)

1.9 TEMPLATE

Template are made of plastic and it look like set square. Template are used to draw some particular object with speed and easy. Square, Triangle, circle, hexagon, ellipse are some of the object made in the template.

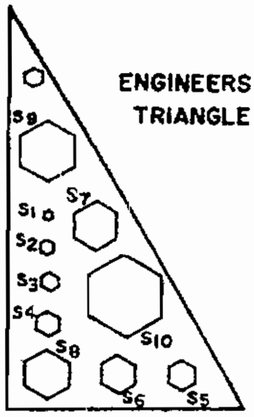

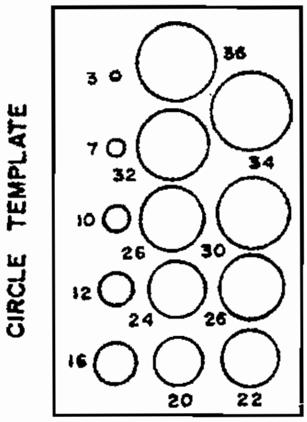

Fig. 1.9

1.10 DIVIDER

The divider consists of two leg with steel needle points pivoted at the top end. Divider is used for

a) dividing a straight line or curve into any number of equal parts.

b) to transfer the dimensions from one part of drawing to another part.

c) to set off given distance from the scale to the drawing.

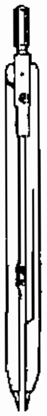

Fig. 1.10

1.11 PROTRACTOR

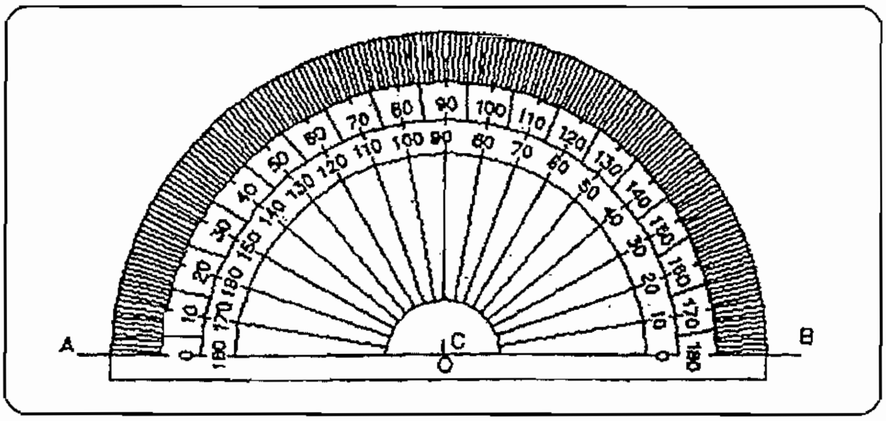

Fig. 1.11

Protractor is made up of wood, transparent celluloid or plastic and they are semi circular shape. It is used to draw or measure the angles. The circumferential edge is graduated to 1° divisions and are numbered at every 10° intervals and is readable from both ends. The diameter of the semicircle is called the base and the center 0 is marked by a short line perpendicular to it.

1.12 FREE HAND SKETCH AND LETTERING

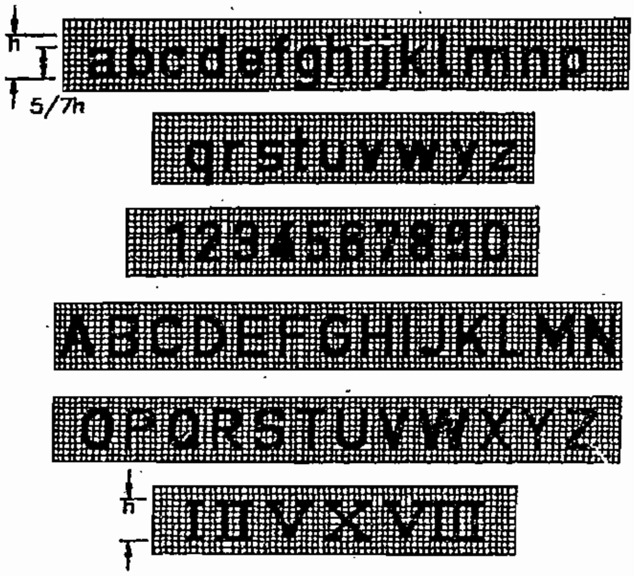

SPECIMEN OF VERTICAL LETTERS AND NUMERALS

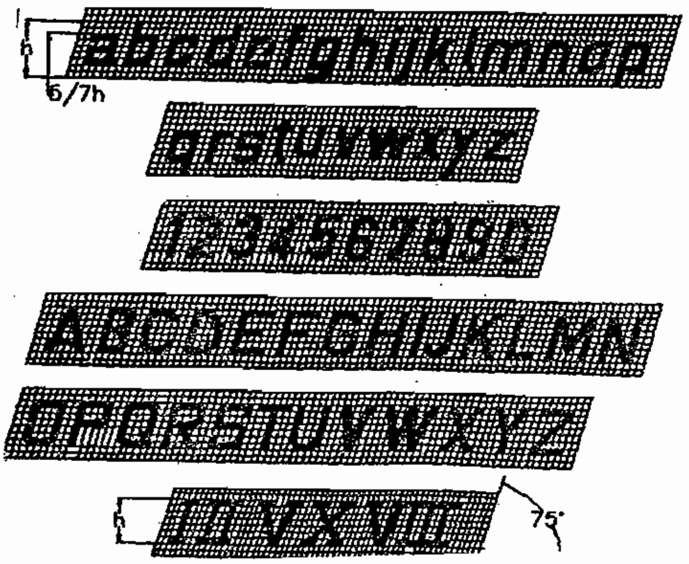

Fig. 1.12

With out using drawing instrument to drawing a object or lettering is called free hand sketch.

Writing of titles, dimensions, notes and other important details on a drawing is called LETTERING. Lettering is an important part of drawing. The drawing even when drawn neatly and accurately its appearance as well as its usefulness may be spoiled, because of poor lettering.

Therefore lettering should be done properly in clear, uniform and legible style. The dimensions and notes should be done in free hand and speedily. Careful and continuous practice will improve the efficiency of lettering skill.

LINES

In engineering drawing different types of lines are used to describe different objects and different reasons. The following types of lines are the important lines used in the engineering drawing.

1. Out line

Out lines are drawn in the outer edge of an aobject. This is a thick line drawn continously without any break, also called object lines.

2. Dotted lines

This line is drawn to indicate certain inner or hidden edges surface of an aobject. It is drawn with a break at regular intervals. The dotted line is drawn with 2 mm length 1 mm intervals.

3. Centre line

This line indicates the centre point of a circles and ares. It is drawn using long and short lines respectively. The long line is six or eight times longer than the small lines which are present in between the long ones.

4. Dimension line

Dimension line indicates the size of an object. The arrow heads are drawn on either ends of this line. The width and the lengthof the arrow head differs according to the length of the line.

5. Extensin line (or) Projection line

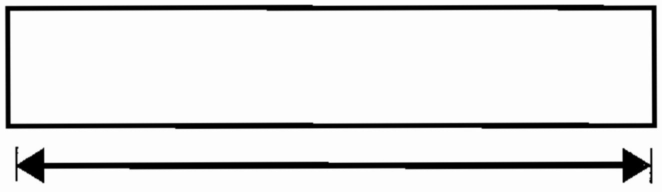

Extension lines are drawn in a direction prependicular to the edge to be dimention line. It indicates the border of an object. The length of this line should extend 3 mm away from the dimention line.

6. Section line (or) Hatching line

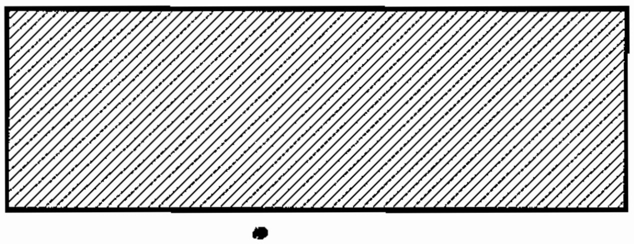

This line is drawn to indicate the cut section of an object. These lines are drawn at an angle of 40°. The spacing between the lines is approximately 1 to 15 mm these lines are drawn lighter than the object lines.

7. Pointer line

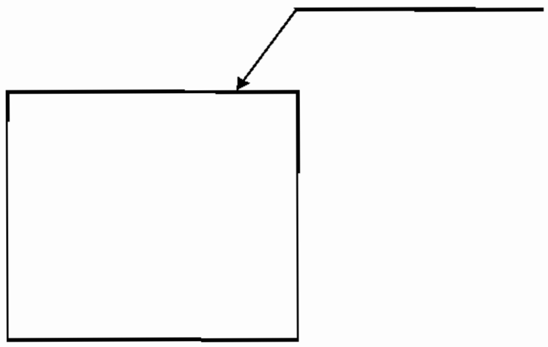

A light bent line with an arrow head pointing an object is known as a pointer line. At the order and dimensiones such as area, radins of a bent part (or) repeated dimension etc., should be marked.

8. Short Break line

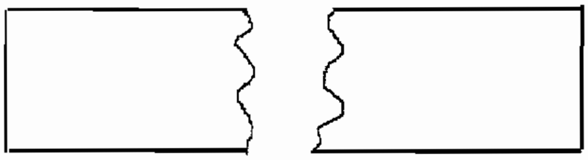

This lien is drawn to indicate unequal borders and a small break in a thing. It can be drawn by hand.

9. Long break line

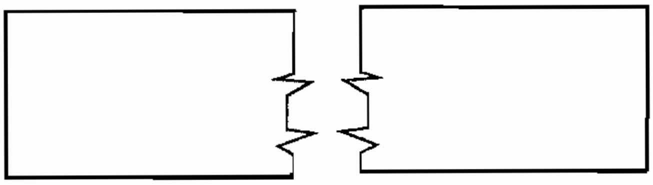

This line is drawn to idnicate a large break in a thing. it is drawn with zig zag line.

POINTS TO BE REMEMBERED BY THE STUDENT

The following points will be of immense help to the drawing student in making drawings neat and tidy.

a) Clean the drawing board before using.

b) See that the paper is perfectly flat on the board.

c) See that the scales and protractor head of the mini-drafter move to any position on the drawing sheet.

d) Keep the hands always clean and keep moist hands and arms of the drawing.

e) Clean the instruments and materials before starting the work and also during the work with towel cloth.

f) Do not remove dust or erased particles by hand.

g) Be sure that the pencil points are sharp all the time.

h) Do not sharpen the pencil over the drawing board or paper.

i) Wipe the excess graphite off the pencil point each time it is sharpened.

j) Neatness and accuracy are the hallmarks of drawing works.

2. GEOMETRICAL DRAWING

2.0. INTRODUCTION

The drawing of object views involves plane geometric constructions. It is necessary to have a good knowledge of plane geometry. Preparation of engineering drawings involves a number of geometrical constructions. Hence it is necessary to study geometrical drawing. Geometrical constructions relating to straight lines, circles, arcs of circles, Triangle, rectangle, square, regular polygons and conic sections are illustrated in this chapter.

POINT

A point is that which has simply position but no magnitude and generally represented by a very small circle or a small dot.

LINE

A line is that which is generated by a moving point under certain condition.

Types of lines :

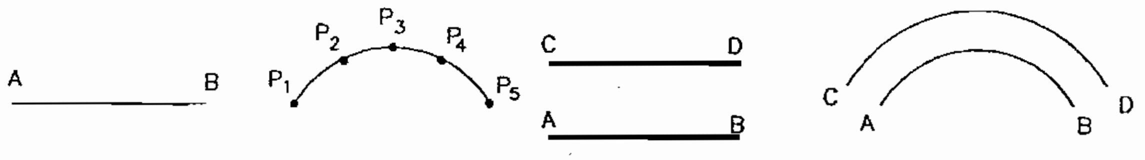

Fig. 2.1

i) Straight line **ii) Curved line** **iii) Parallel line**

To bisect a given straight line or arc

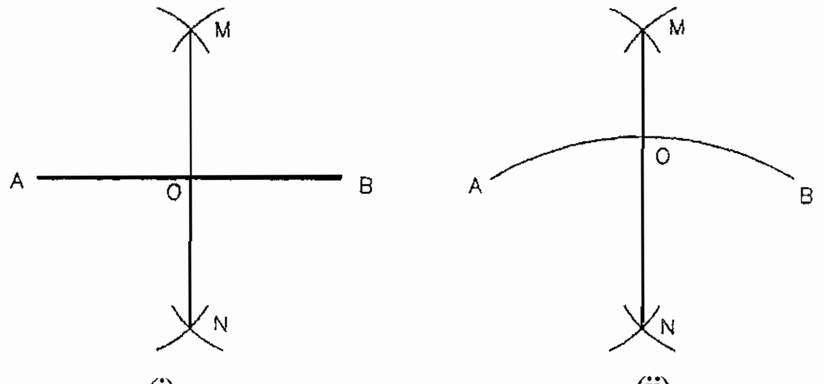

Fig. 2.2

Let the given straight line or arc be AB.

With A and B as centers and radius grater than half of AB, draw arcs intersecting each other at M and N respectively.

Join M and N which bisect the given line or arc.

2.3 To draw a perpendicular line to a given line from a given point with in it

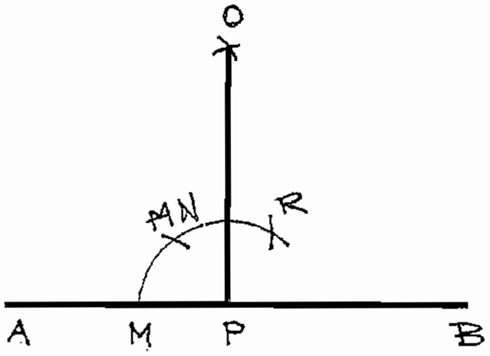

Fig. 2.3

Let P be the given point on a given line AB.

With P as centre, draw an arc cutting AB at M by taking any suitable radius.

With same radius, mark two equal divisions MN and Nr respectively.

With centers N and R and of any suitable radius draw arcs to intersect at a point 0.

Draw a line OP through 0 and P, so the line OP is the required perpendicular line.

2.4 Dividing a line into equal parts

Dividing a line into number of equal parts by using dividers is not very accurate. All though great care may be taken, an accumulation of small in accuracies is bound to happen. A satisfactory method is given below.

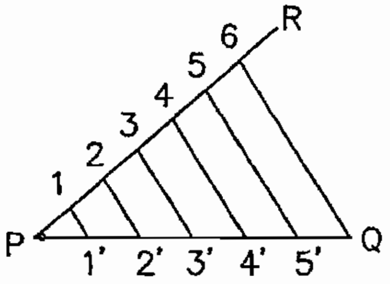

Fig. 2.4

If the line PQ is to be divided into six equal parts.

Draw a line PR inclined at any convenient acute angle to PQ.

Make six equal divisions A any convenient length along PR starting from P.

Join Q and 6. Draw lines parallel to Q6 through the division points 1,2,3,4 and 5 cutting PQ at 1’,2',3',4', and5'.

Points 1’,2',3',4' and5' are the division points dividing PQ into equal parts.

ANGLES

An angle is the inclination between two inter setting lines.

2.5 TYPES OF ANGLES

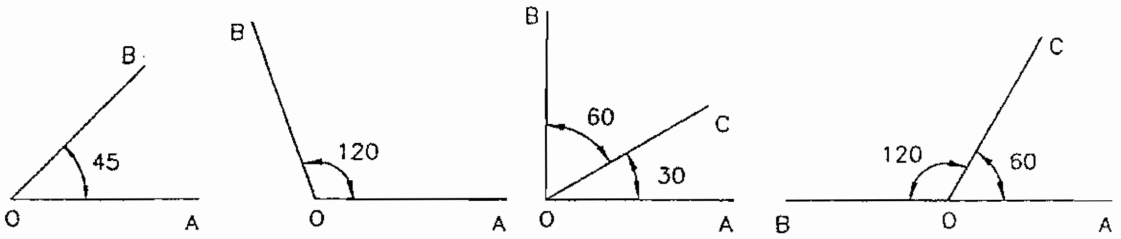

Fig. 2.5

Right angle: Angle equal to 90° is called right angle.

Acute angle: Angle less than 90° is called Acute angle.

Abtuse angle: Angle greater than 90° is called abtuse angle.

Complementary angle: Complementary angle are those when two angles together make 90°, Thus in Fig. 2.5 (iv), the angles AOC and BOC are complementary angles. The angle AOC is also said to be the complement angle of BOC and vice-versa.

Supplementary angles: supplementary angles are those when two angles together make 180°. Thus in Fig 2.5 (v), the angles AOC and BOC are supplementary angles. The angle AOC is also said to be the supplement angle of BOC and vice-versa.

2.6 Bisecting a given angle between two given lines

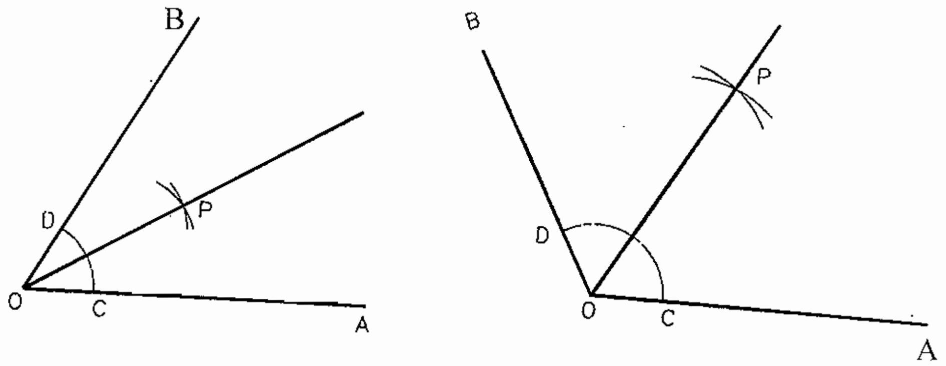

Fig. 2.6

Let the given angle be AOB between to given lines OA and OB.

With O as centre and with any convenient radius, draw an arc cutting OA at C and OB at D.

Now with C and D as centre and any convenient radius draw arcs to inter seet each other at P.

Draw a line through O and P, which bisects the given angle AOB.

2.7 Drawing an arc of given radius touching two given straight lines at right angles to each other

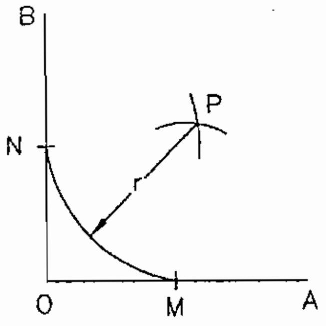

Fig. 2.7

Let OA and OB be the given lines and r be the given radius. See Fig.2.7.

With 0 as centre and of radius r, draw arcs cutting OA at M and OB at N. with same radius and M and N as centre, draw arcs to intersect at P.

With P as centre and of radius r, draw the required arc MN.

2.8 Drawing of angle without Protractor

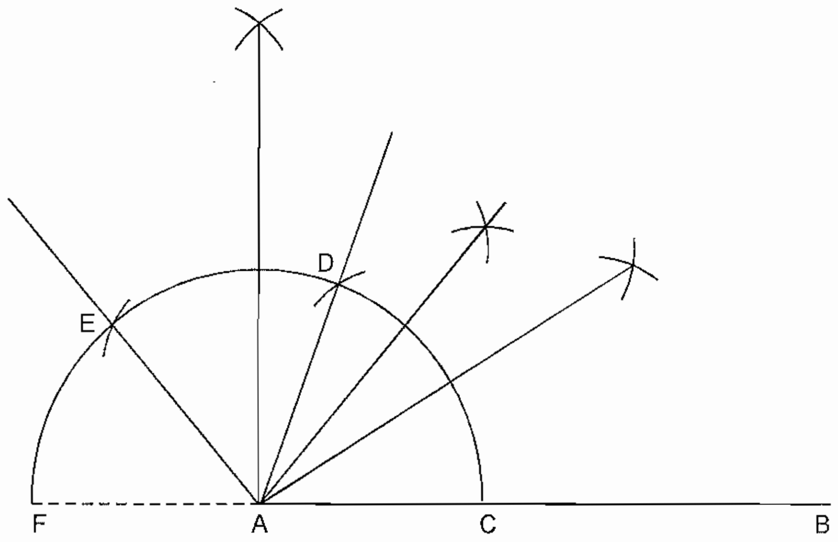

Fig. 2.8

1. Draw the Horizantal line AB
2. Draw A as the centre to a convenient radius draw semi circle meet AB at C
3. AC as radious and C is a centre, draw an are to cut the semi circle at D
4. Then D as a Centre and witht he same radious draw another are to cut at and E respectively
5. Joint AD, AE, AF now DAC = 60°, EAC = 120° and FAC = 180°
6. Bisect again the are CD, DE, CF we get more angles.

TRIANGLES

2.9 A Triangle is a plane figure formed by three straight lines containing three angles

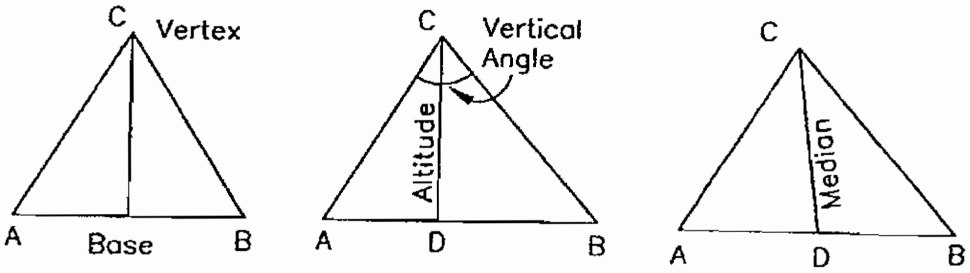

Fig. 2.9

The sum of all the angles of a triangle is always 180°.

The side on which it is supposed to stand is called its base and the angles at the base arc known as base angles.

The point where the other two sides meet is called a vertex and the angle at the vertex is called a vertical angle.

The line drawn from the vertex and perpendicular to the base or base produced if necessary is called an altitude.

The line joining the angular point of a triangle to the middle point of the opposite of an angular point is called the Median.

2.10 TYPES OF TRIANGLE

i) **Equilateral Triangle :** It's that in which all the three sides are equal and the three angle arc equal

ii) **Isosceles Triangle :** It is that in which two sides as well as the angle opposite to them are equal

iii) **Scalene Triangle :** It has none of sides or angle equal. The altitude may either be within or outside the triangle.

iv) **Right angled Triangle :** It is that in which one angle is equal to 90° and the side opposite to the right angle is called hypotenuse,

v) **Acute angled triangle :** It is that in which all the angles are a cute ie. Less than 90°.

vi) **Obtuse angled Triangle :** It is that in which one of its angles is obtuse and the other two angles are acute.

Drawing an equilateral triangle, given the length of one side

Let AB be the given length of one side of an equilateral triangle.

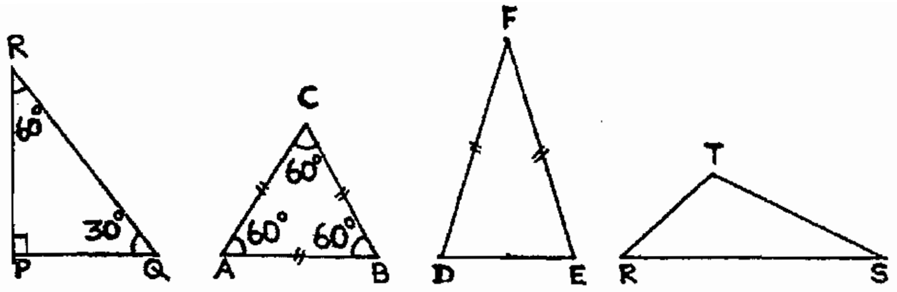

Fig. 2.10

With T-square and set-square only

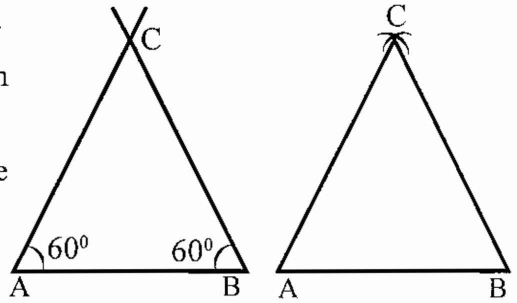

Draw a line AB of given length by means of drafter.

Set the drafter at 30°-60° and draw a line An through A making an angle of 60° with AB.

Similarly through B, draw a line BN making the same angle with BA there by intersecting the first line at C.

Join AC and BC. Then ABC is the required equilateral triangle.

With the help of compass

Draw a given line AB. With a and B as centers and radius equal to AB, draw as intersecting each other etc.

Join Ac and BC. Then ABC is the required equilateral triangle.

SQUARE

Square is the quadrilateral in which all the sides are equal and the angles are at right angles. Draw a square given the length of one side :

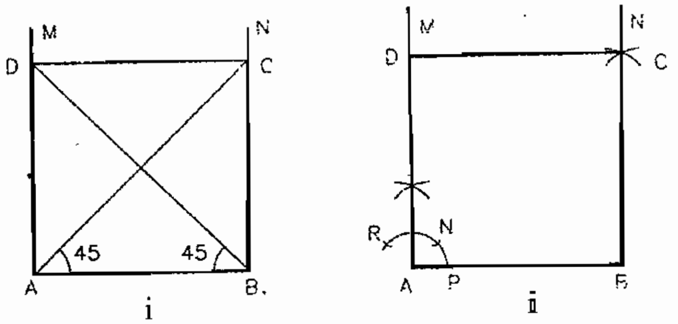

Fig. 2.11 (i & ii)

Let AB be the length of one side of square.

a) With T-Square and Set Square only

Draw a line AB by means of a T-Square through A and B draw vertical line AM and BN Draw two lines AC and BD inclined at 45° to AB and BA, there by cutting BN at C and AM at D. Join C with D. Then ABCD is the required square.

(b) With the help of compass :-Draw a given line AB At A draw a line AM perpendicular to AB With A as centre and radius AB, draw an arc cutting AM at D. With B and D as centers and having same radius ie. AB, draw arcs intersecting each other at' C. Join BC and CD. Then ABCD is the required square.

2.12 Draw a square inscribed in a circle

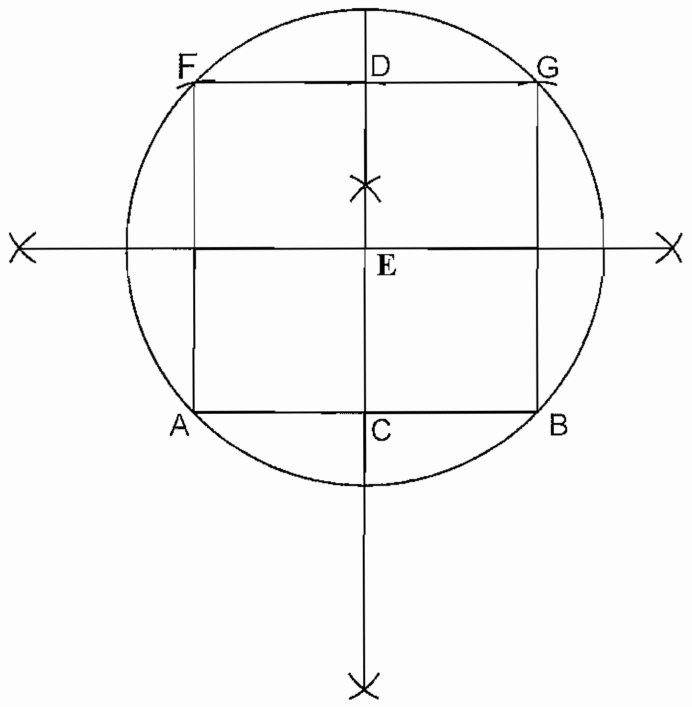

Fig. 2.12

1. Draw Horizantal line AB

2. Bisect the line AB

3. C as a centre draw the vertical line CD

4. Bisect the line CD

5. E as a centre draw the circle EA is the radious

6. Joint AF, BG, FG

Draw a circle inscribed in a square :

Draw a straight line AB.

Draw vertical line AM and BN from A and B.

With A and B as the centers draw arcs radius of AB, these arcs cuts AM at D and BN at C. Join CD.

Draw two diagonals AC and BD. These two diagonals intersecting at 0. Draw a vertical line from 0 to the midpoint of line AB. Draw a circle with 0 as centre and radius of OP.

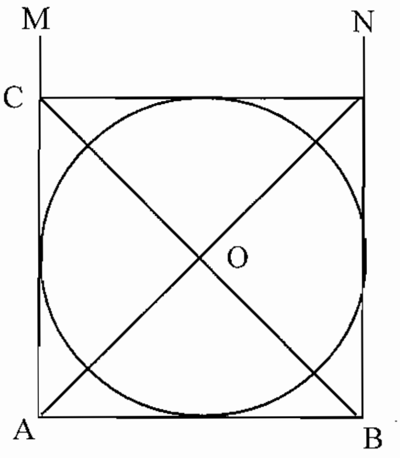

Fig. 2.12.(a)

RECTANGLE

Rectangle is the quadrilateral in which the opposite sides are equal and all the angles are at right angles.

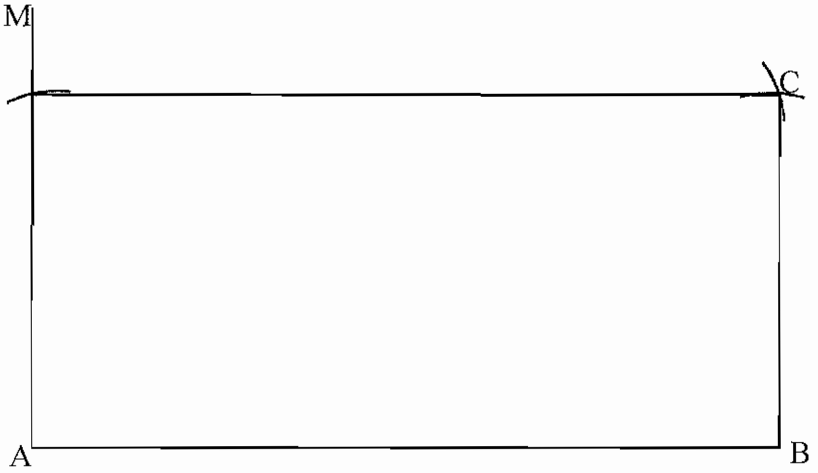

Fig. 2.13

Draw a rectangle of length 80mm and breath 40mm.

Draw a straight line AB equal to 80mm From A draw vertical line AM.

With A as centre and radius of 40mm draw an arc cutting AM at D.

With D as centre and radius of 80mm draw an arc.

With B as centre and radius of 40mm draw an arc.

These two arcs intersecting each other at C.

Join BC and CD. Then ABCD is the required rectangle.

2.14 POLYGON

A polygon may be defined as a plane figure bounded by straight lines. It is a plane figure bounded by more than four straight lines and containing more than four angles.

Types of polygon

If all the sides and angles of a polygon are equal it is called a Regular polygon, but if all the sides and angles are un equal, then it is called an Irregular polygon.

Regular polygon can be inscribed in or circumscribed around a circle

The polygons are named according to the number of their sides and angles.

PENTAGON

Pentagon is that which has five equal sides and angles

2.15 Draw a pentagon of a given side (say a40mm side)

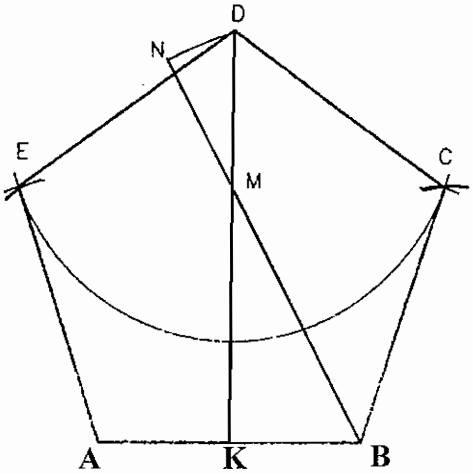

Fig. 2.15

Draw a line AB equal to 40mm. Bisect it at K and draw KD perpendicular to it.

Cut of KM=AB. Join BM and produce it to N so that MN=half of AB.

With D as centre and radius equal to AB draw an arc EC.

With A and B as centers and having same radius cut the previous ac at E and C.

Join BC, CD, DE and EA. Than ABCDEF is the required pentagon.

2.16 HEXAGON

Hexagon is that which has six equal sides and angles. Draw a hexagon of given side (say 30mm side)

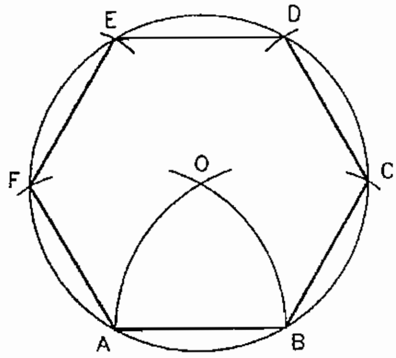

Fig. 2.16

- Draw a line AB equal to 30mm.
- With A and B as centers and radius of 30mm, draw arcs intersecting at 0.
- With 0 as the centre and having 30mm radius, draw the segment of a circle.
- With AB as radius, cut the segment at C,D,E and F.
- Join BC, CD, DE, EF and FA. Then ABCDEF is the required regular hexagon.

2.17 Draw a hexagon about a given circle (Radius =30mm)

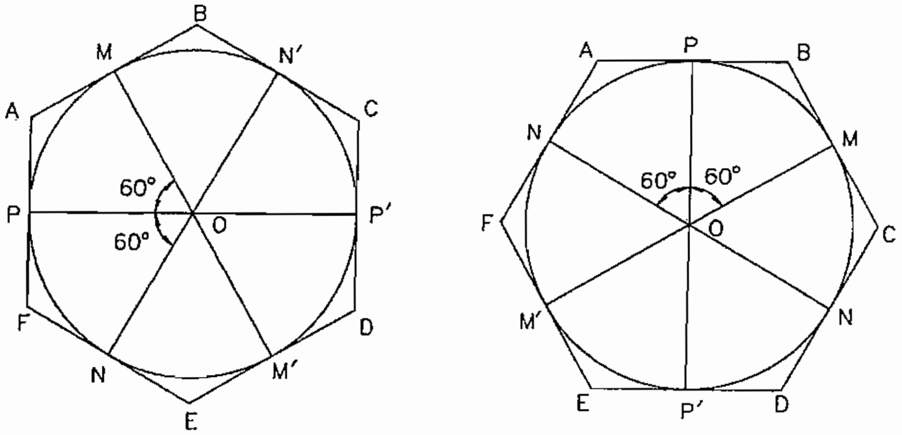

Fig. 2.17

- Draw a circle of radius of 30mm with O as centre.
- Draw horizontal diameter PP1 and other diameter MM' and NN1 making and angle 60°
- Now, draw tangents at all the six points by intersecting at A, B, C, D, E and F. Then a, b, c, d, e, f is the required hexagon.

2.18 HEPTAGON

Heptagon is that which has seven equal sides and angles.

Draw a heptagon of given side (say 40mm side)

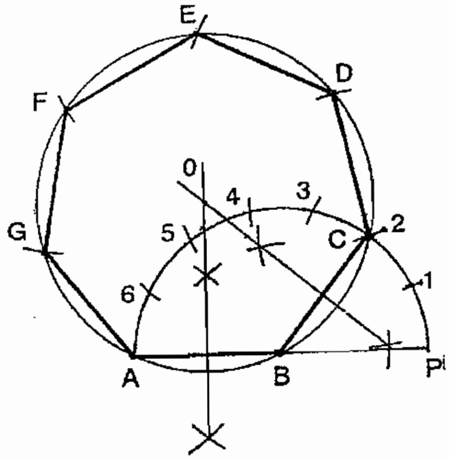

Fig. 2.18

- Draw a line AB equal to 40mm
- Produce AB to P such that AB=BP
- With centre B and radius AB, draw a semi circle.
- Divide the semi circle into 7 equal parts name the division points as 1,2,3,4,5,6 starting from P.
- Join Band 2.
- Draw the perpendicular bisectors of AB and B2, to cut each other at O.
- With O as centre and radius of OA, draw a circle.
- With radius AB, cut the circle successively at C,D,E,F and G to BC, CD, DE, EF, FGandGA.
- ABCDEFG represents the required heptagon.

2.19 OCTAGON

Octagon is that which has eight equal sides and angles.

Draw and octagon is a circumscribed circle (Radius 30mm)

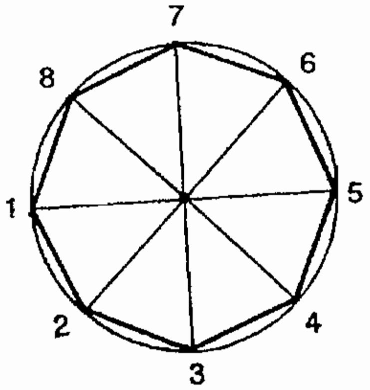

Fig. 2.19

- With 0 as centre and radius of 30mm draw a circle.
- Draw the horizontal centre line 1-5 and vertical
- Centre line 3-7 of the circumscribed circle.
- Draw line 2-6 and line 4-8 at 45° to horizontal and vertical centre lines respectively.
- Draw lines 1-2, 2-3, 3-4, 4-5, 5-6, 6-7 and 7-8 to obtain the required octagon.

2.20 CONIC SECTIONS

Conic section are the curves obtained by the intersection of a right circular cone by a plane at different angles. Ellipse, parabola, and hyperbola are the curves thus obtained and hence are called the conic sections or conies.

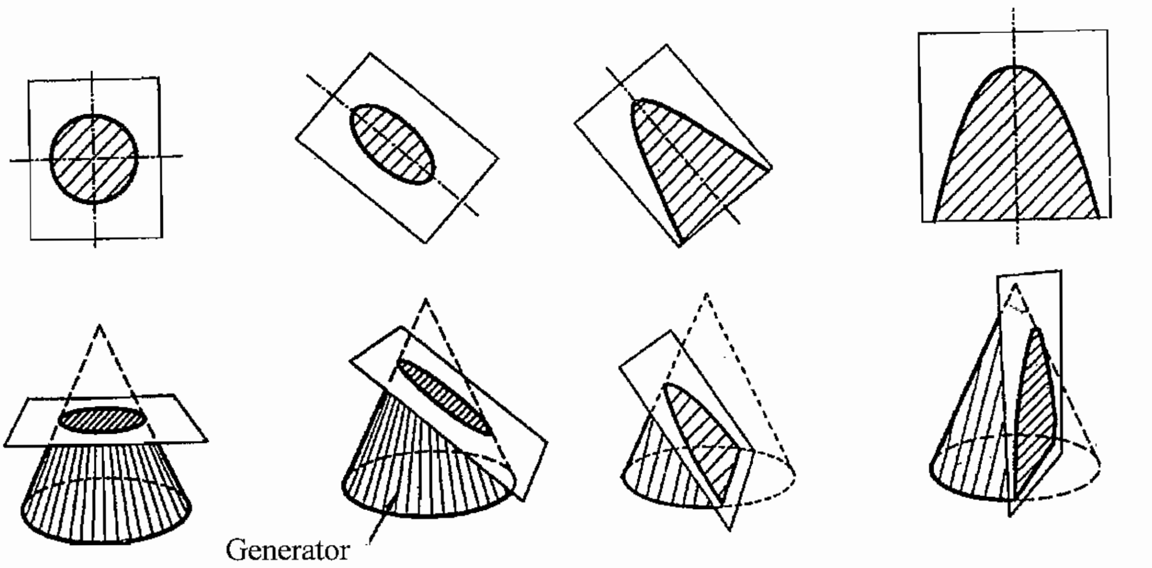

(a) CIRCLE **(b) ELLIPSE** **(c) PARABOLA** **(d) HYPERBOLA**

Fig. 2.20

When the cutting plane is perpendicular to the axis of the cone but does not pass through the apex, the curve obtained is a circle. (Fig.2.20.a)

When the cutting plane is inclined to the axis and is not parallel to a generator and cuts all the generators, the section obtained is an ellipse (Fig. 2.20b)

When a cone is cut by a plane which is inclined to the axis and is parallel to a generator, we have a parabola (Fig. 2.20 c)

When the section plane makes a smaller angle with the axis than do the generators or is parallel to the axis, the resulting curve is a hyperbola (Fig 2.20 d)

2.21 ELLIPSE

An ellipse is defined as a plane curve which is the locus of a point moving in such a way that the sum of its distances from two fixed points in the plane is always a constant.

Properties Of Ellipse

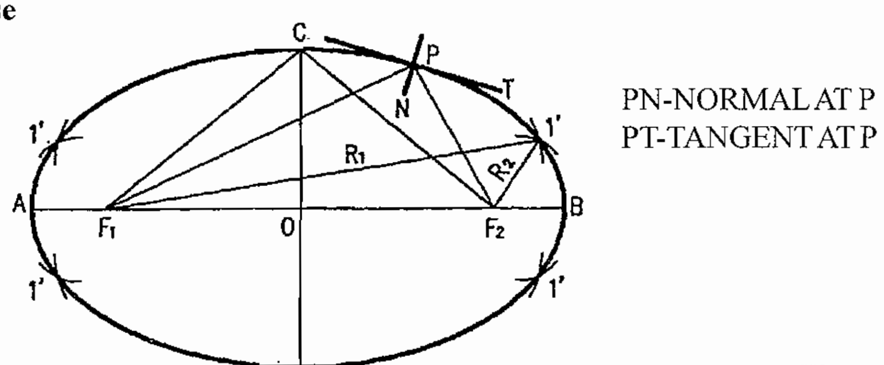

F_1 and F_2 are the foci of ellipse

Fig. 2.21

1) The two fixed points are called the focuses or foci, in fig. 2.21. F_1 and F_2 are the foci, Fi and F2 are equidistant from the centre 0.

2) The long diameter passing through the foci and terminated by the curve is called the major axis (AB in the fig)

3) The perpendicular bisector of the major axis terminated by the curve is known as the minor axis (CD in the fig)

4) The distance of a point on the curve from the foci are called focal radi (R_1 and R_2 in the fig)

5) By definition

$PF_1+PF_2=AF_1+AF_2=CF_1+CF_2$

$OA=OB$ AND $OF_1=OF_2$.-.$AF_1+AF_2=AF_2+BF_2=AB$ (Major Axis)

$CF_1+CF_2=AB$ But$CF_1=CF_2$.-. $CF_1=CF_2 = \frac{\text{MajorAxis}}{2}$

Ellipse drawn in different (several) method. The important method of drawing the ellipse are

1) Concentric circle method

2) Trammel method

2.22 Draw an ellipse of major axis 100mm and minor axis 60mm in concentric circles method

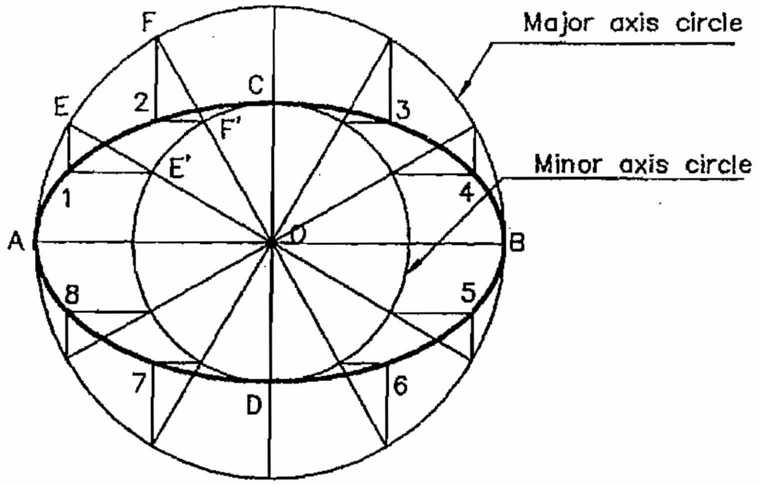

Fig. 2.22

1) Draw AB (100mm) and CD (60mm) the major and minor axes perpendicular to each other cutting at O.

2) With 0 as centre, draw two concentric circles of diameter 100mm and 60mm as shown in Fig.

3) Draw radial lines OE',E, OF', F etc at convenient angular intervals of say 30°.

4) From points E,F etc on the major axis circle, draw lines perpendicular to the major axis AB. From points El FI etc on the minor axis circle, draw lines parallel to the major axis. The intersect is of perpendicular and parallel lines from points on the same radial line will fix a point on the required ellipse.

(5) Draw a graceful curve through these points to define the ellipse. This method is more accurate than the others.

2.23 Draw an ellipse of Major axis 110mm and minor axis 70mm using a trammel method

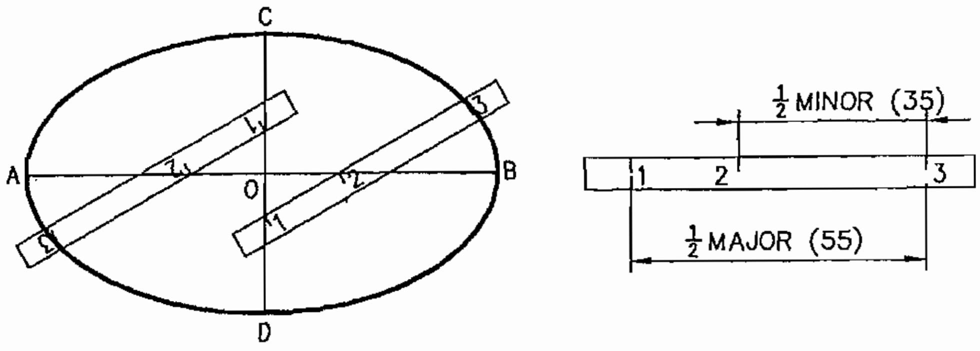

Fig. 2.23

Draw AB (110mm) and CD (70mm) the major and minor axes.

On the straight edge of a strip of paper, mark 1-3 equal to half the major axis (55mm) and 2-3 equal to half the minor axis (35mm)

Place the paper strip trammel in such a way that 2 is on the major axis AB and 1 is on the minor axis CD. Then 3 will lie on the required ellipse. The trammel is moved to different positions and the positions occupied by 3 when 1 is on the minor axis and 2 on the major axis are marked.

A smooth curve is drawn through these points to obtain the required ellipse.

2.24 PARABOLA

A Parabola is defined as a plane curve which is locus of a point moving in such a way that its distance from a fixed point, the focus is always equal to its distance from a fixed straight line.

Draw a parabola of base 130mm and axis 100mm by using rectangle method

1) draw the base EF, 130mm long. Mark its midpoint B.

2) Draw the axis BA, 100mm long perpendicular to EF

3) Complete the rectangle CDEF of which DE=AB.

4) Divide BF and CF in to the same number of equal parts. Number the division points from F as shown in the fig.

5) Draw lines joining A with points I1, 2' and 3'

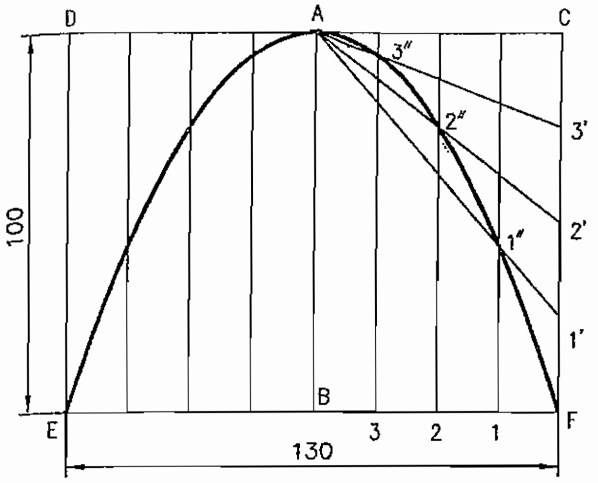

PARABOLA — RECTANGLE METHOD

Fig. 2.24

6) Draw lines parallel to AB through 1,2 and 3 to intersect A11, A2', and A31 at points 1", 2" and 3" respectively.

7) Draw a smooth curve through F, 1",2",3" and A to get one half of the parabola.

The other portion of the parabola is obtained by making the same construction in the other portion of the rectangle.

2.25 Draw a parabola of base 90mm and axis 40mm using tangent method

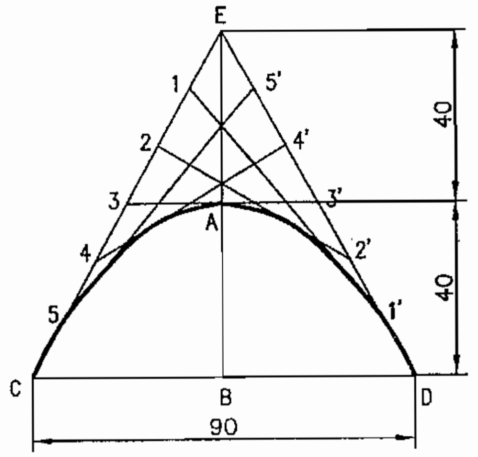

PARABOLA BY TANGENT METHOD

Fig. 2.25

1) Draw the base CD, 90mm long.

2) Mark its mid-point B and draw the axis BA 40mm long perpendicular to CD.

3) Produce BA to E such that AE = AB.

4) Draw lines joining E with C and D.

5) Divide EC and ED into the same number of equal parts, say 6.

6) Number the division points as shown in fig.

7) Draw lines joining 1 and 1, 2 and 2, 3 and 3 etc.

8) Starting from C, draw a curve tangential to the lines 5-5, 4-4 etc.

9) The resulting curve is the required parabola.

2.26 HYPERBOLA

Hyperbola is defined as a plane curve which is the locus of a points moving in such a way that the difference between its distances from two fixed points called foci, is a constant.

Draw a rectangular hyperbola passing through a point A situated at a distance of 50mm from OX and 35mm from OY, OX and OY being the asymptotes

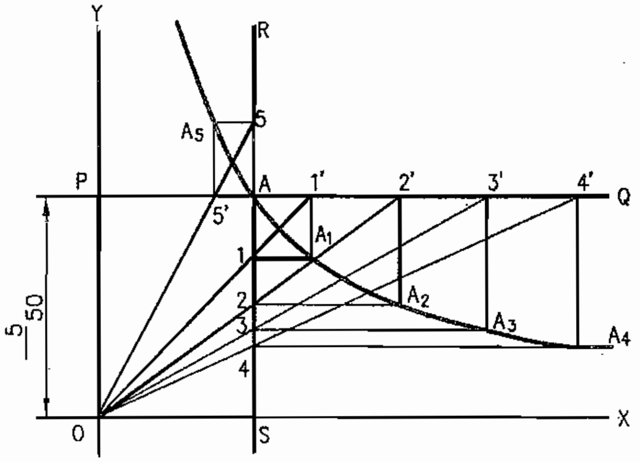

Fig. 2.26

Draw OX and OY, the asymptotes. Mark the position of the given point A. Through A, draw lines PQ and RS parallel to OX and OY respectively.

Mark any point on RS, such as 1. Draw a line joining 0 and 1 and produce it to meet PQ at 1'.

Through point 1', draw a line parallel to OX and through point 1' draw a line parallel to DY'. Let these two lines meet at A1, a point on the required curve.

Obtain points A1, A3 etc in the same manor.

Line 0-5 meets PQ at 5'. Parallel to the asymptotes drawn through points 5 and 5' intersect at A5 which is also a point on the curve.

Draw a smooth curve through the points A_5, A, A_1 A_2, A_3 etc. to obtain the required rectangular hyperbola.

3. ORTHOGRAPHIC PROJECTION

When the object is viewed orthograpically, i.e. at right angle to the place projetion, the reprentation of the image is called orthographic projection. The Orthographic projection shows the true shape of all parts of an object together with their sizes. In orthographic Projection, Front view, Top view and side view of an object are drawn.

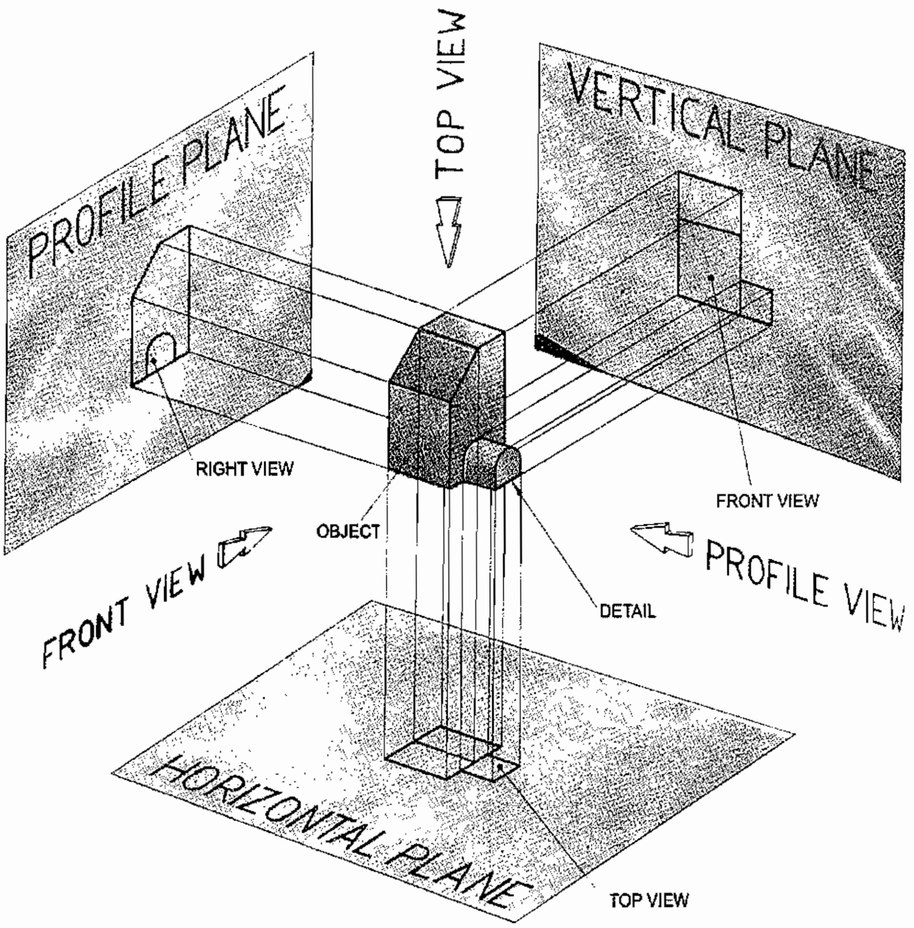

The Front view or front elevation of an object is obtained on the vertical plane. The Top view or plan of an object is obtained on the horizontal plane. The side view of an object is obtained on the profile plane.

The Front view gives the height and length of an object. The top view gives the length and width of an object. The side view gives the height and width of an object.

FOUR QUADRANTS AND SYSTEMS OF PROJECTION

In order to describe the shape and size of the object, it should be projected on two principal planes called vertical plane - VP and Horizontal Plane - HP. These planes intersect at right

angles to each other and it these principal planes of projection are extended beyond the line of intersection they form four quadrants. Those quadrants are numbered as First Quadrant, second quadrant, third quadrant and fourth quadrant.

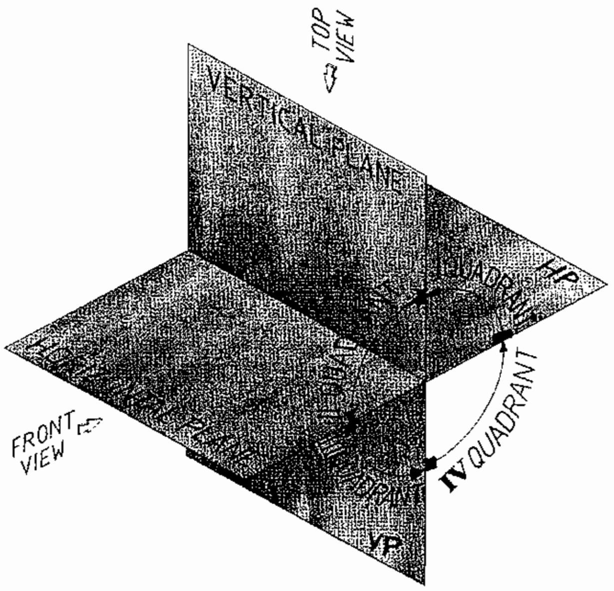

The object may be situated in any one of the quadrants and the position of the object is as follows:

1. in first quadrant - above HP and V.P.
2. in second quadrant - above HP and V.P.
3. in third quadrant - below HP and VP.
4. in fourth quadrant - below HP and VP.

After drawing the plan and front elevation, HP is rotated in the clockwise direction and bring it in plane with the VP. In doing so, plan and elevation can be clearly visualized only in the First and Third quadrants. Where as in Second and Fourth quadrants plan and elevation over lop. Hence, in Engineering Drawing only First or Third angle projections methods are used.

FIRST ANGLE PROJECTION

In thefirst angle Projection method the object is placed above the H.P. and in front of the V.P. i.e. in the first quadrant. In this method the object lies between the observer and the plane of projection.

THIRD ANGLE PROJECTION

In the third angle Projection method the object is placed below the HP and behind VP i.e. in the third quadrant. In this method of projection, the plane of projection (VP) is in between the object and the observer

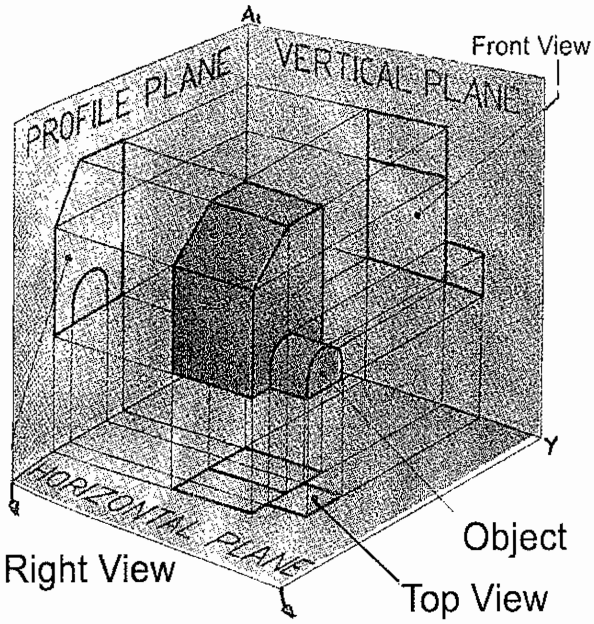

Object in I Quadrant
with the views projected on the planes

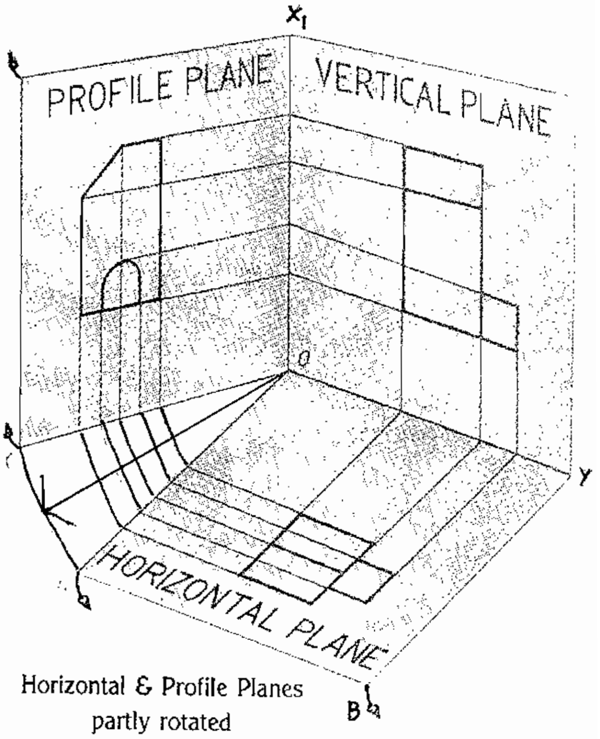

Horizontal & Profile Planes
partly rotated

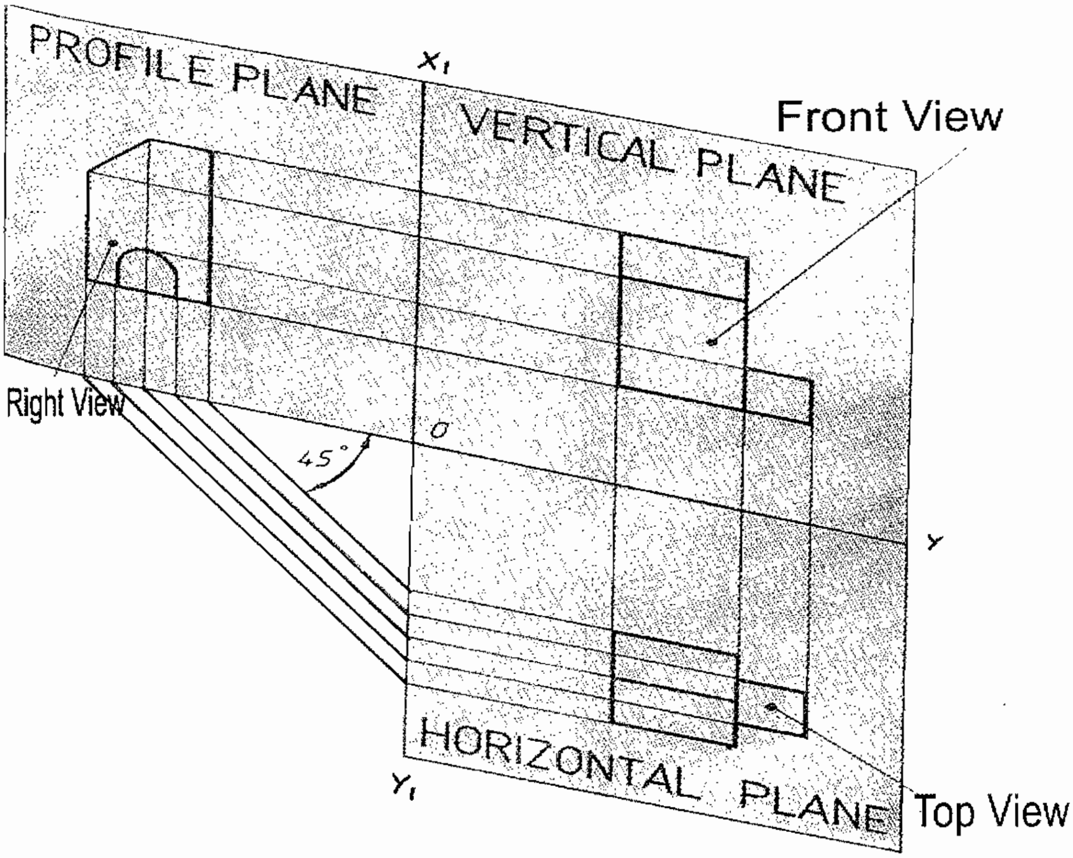

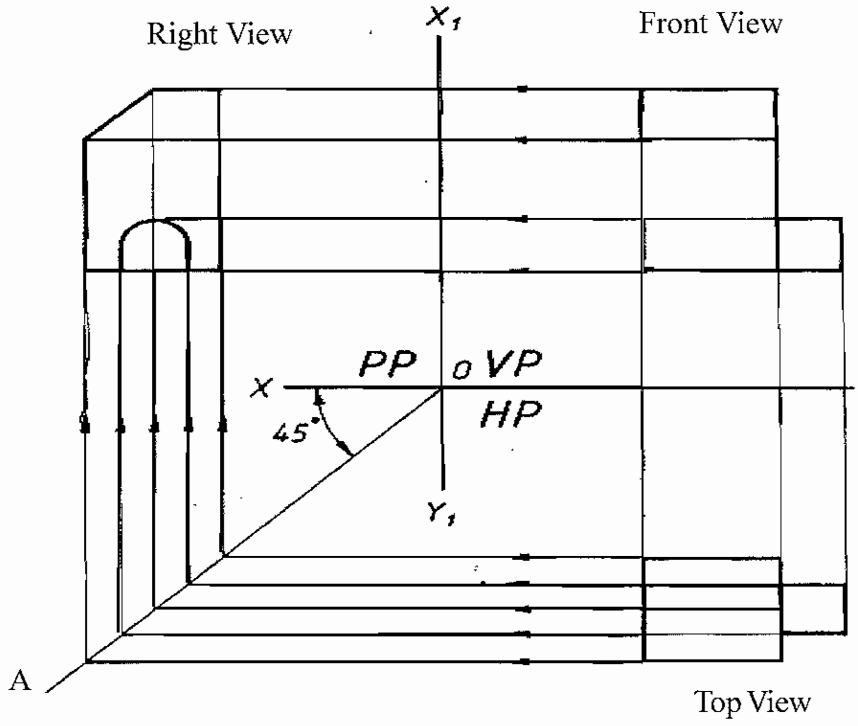

Third Angle Projection

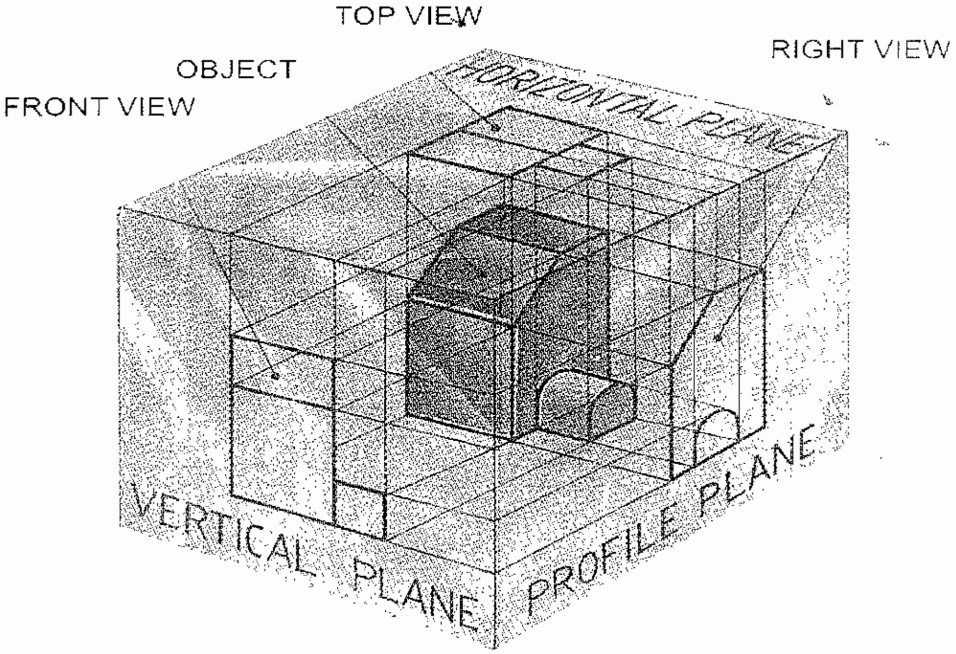

Object in III Quadrant
with the views projected on the planes

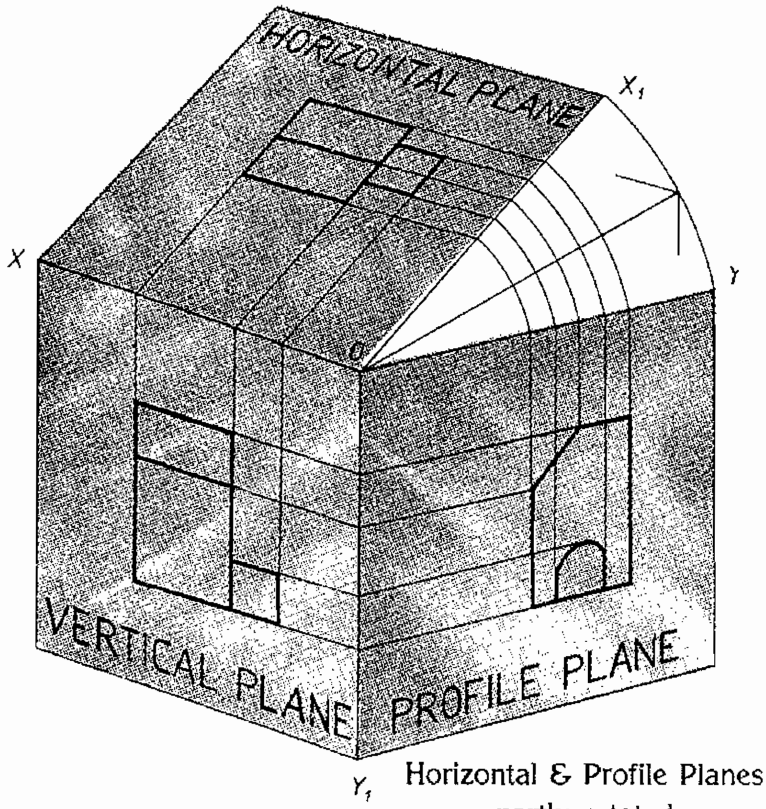

Horizontal & Profile Planes partly rotated

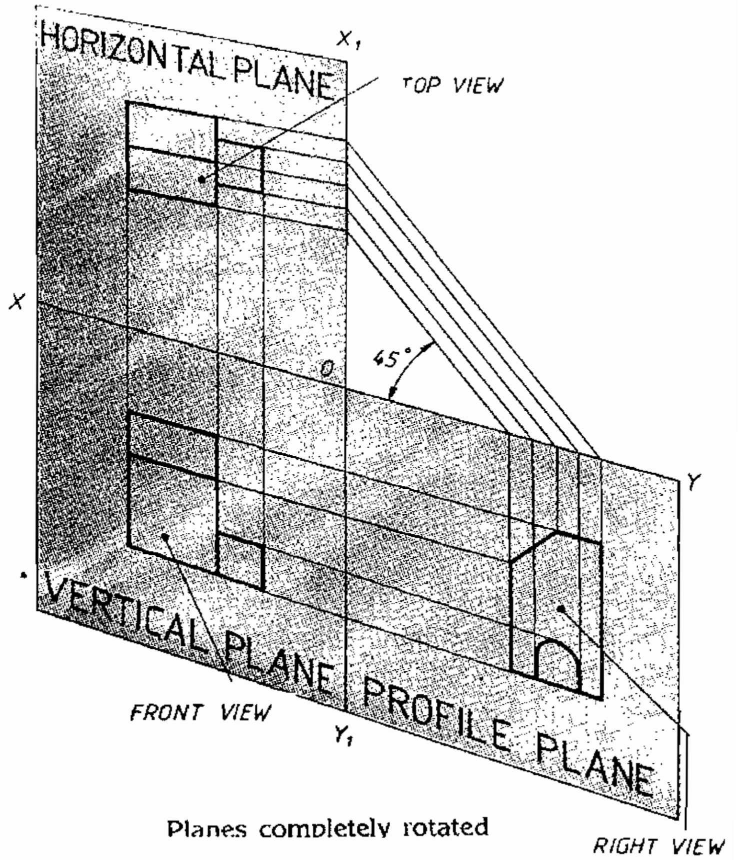

Planes completely rotated

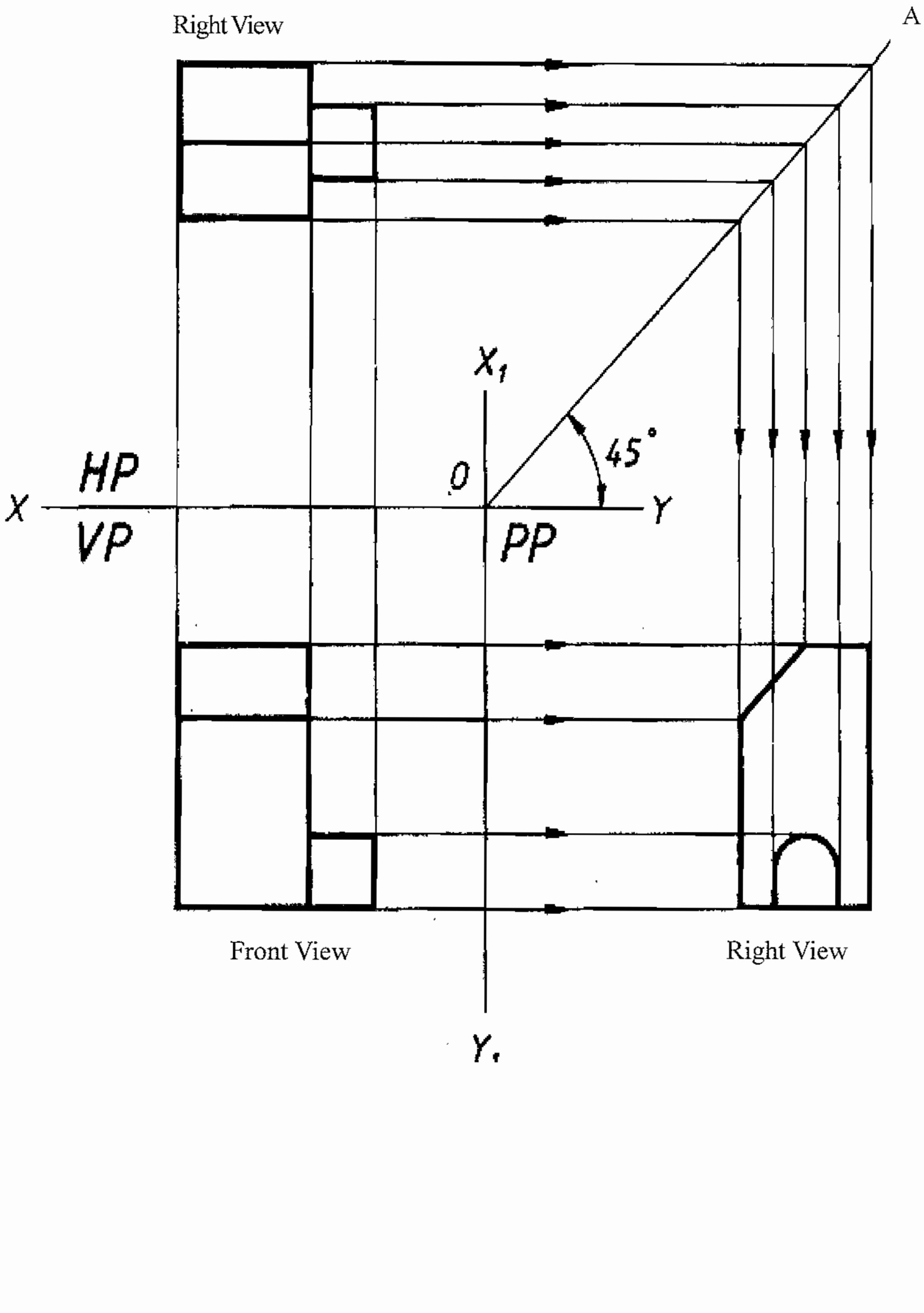
Right View
A
X_1
45°
HP
X
0
Y
VP
PP
Front View
Right View
Y_1

METHOD OF DRAWING THIRD ANGLE PROJECTION

(i) Draw a line XY. The plane above the line is HP and the plane below the line is VP.

(ii) Draw a rectangle equal to the total length and height of the object. Then mark the visible horizontal and veritcal lines with in the rectangle. Darken the front view of the object as shown in the figure.

(iii) The Top view is projected in HP. Draw a rectangle equal to the length and width of the object with the extention lines from the front view, that denote the length of the visible parts. Only the width to be marked vertically in the Top view.

(iv) The side view is drawn eighter on right or left side of the Front view.

(v) The height and width of the object are projected in the side view.

Projection lines should be drawn equal to the width of the object from top view and equal to the height of the object from Front view.

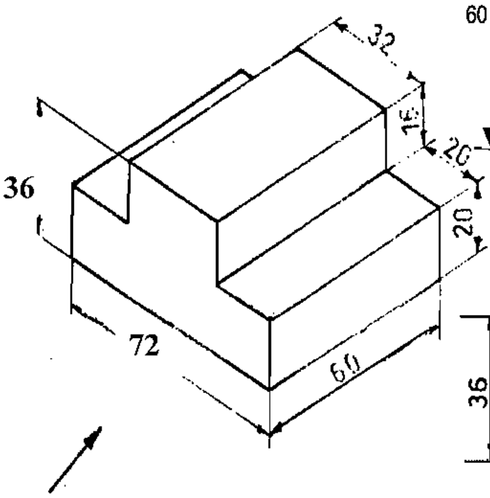
32
15
20
20
36
72
60

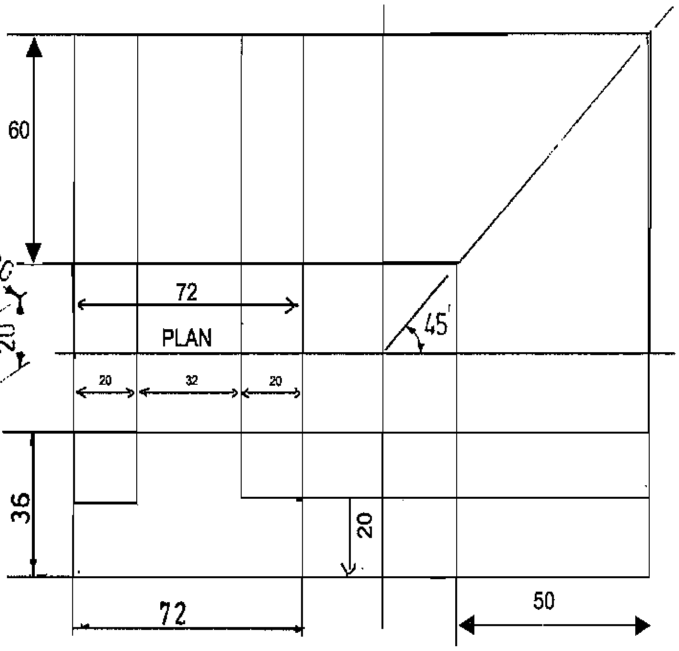
60
72
PLAN
45°
20
32
20
36
20
72
50

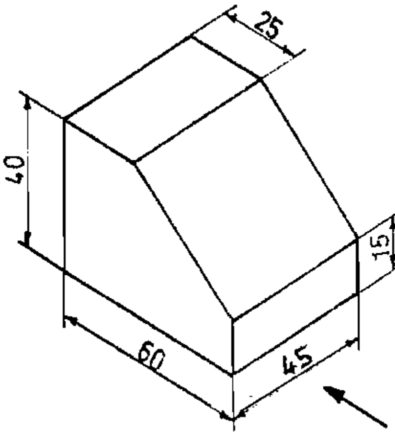
25
40
15
60
45

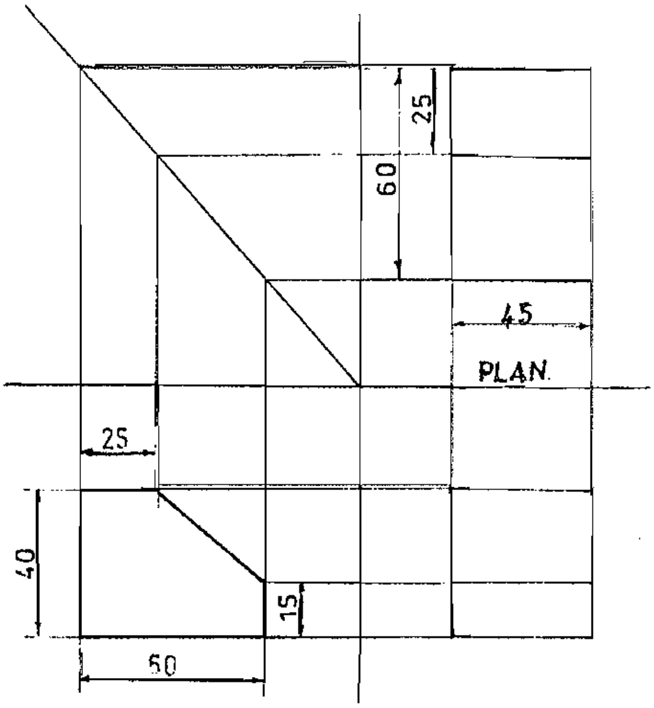
25
60
45
PLAN.
25
40
15
50

Example 1

Draw the Elevation looking from the direction of arrow FV, plan and Right side view, left side view for the pictorical view show in figure.

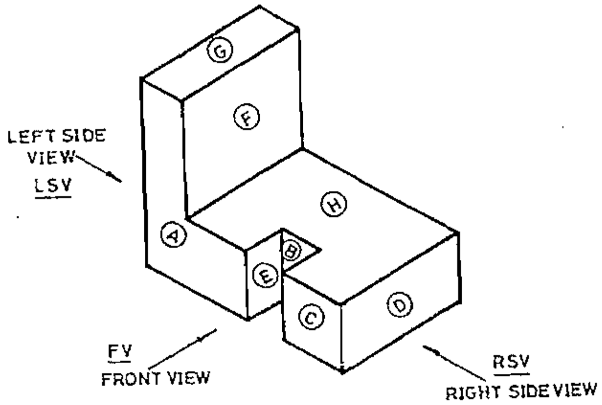

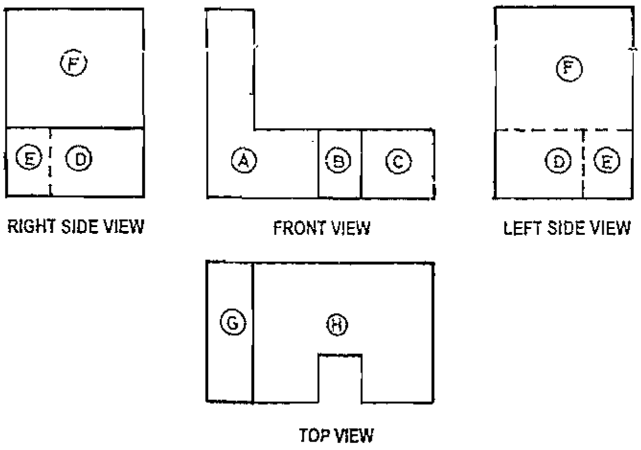

Example 2

Draw the Elevation looking from the direction of arrow FV, plan and Right side view, left side view for the pictorical view show in figure.

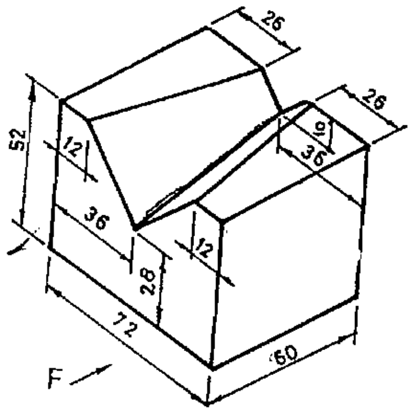

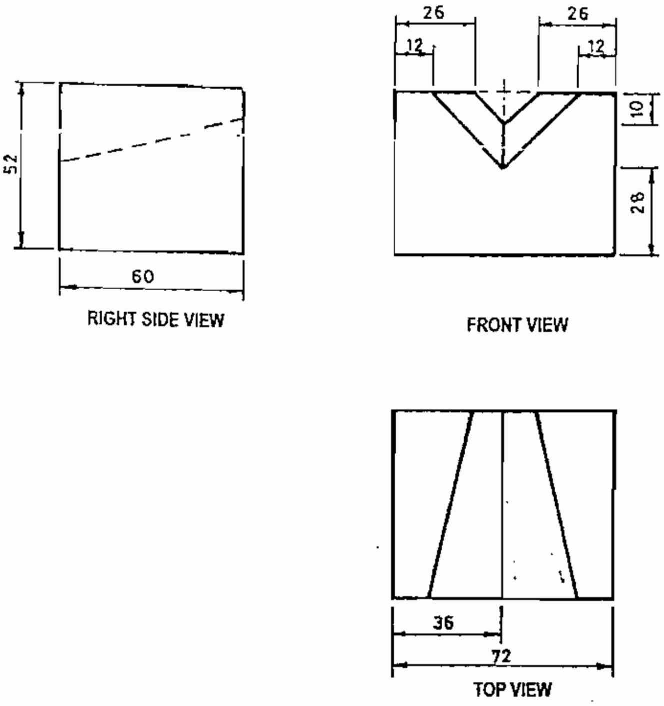

Example 3

Draw the Elevation looking from the direction of arrow FV, plan and Right side view, left side view for the pictorical view show in figure.

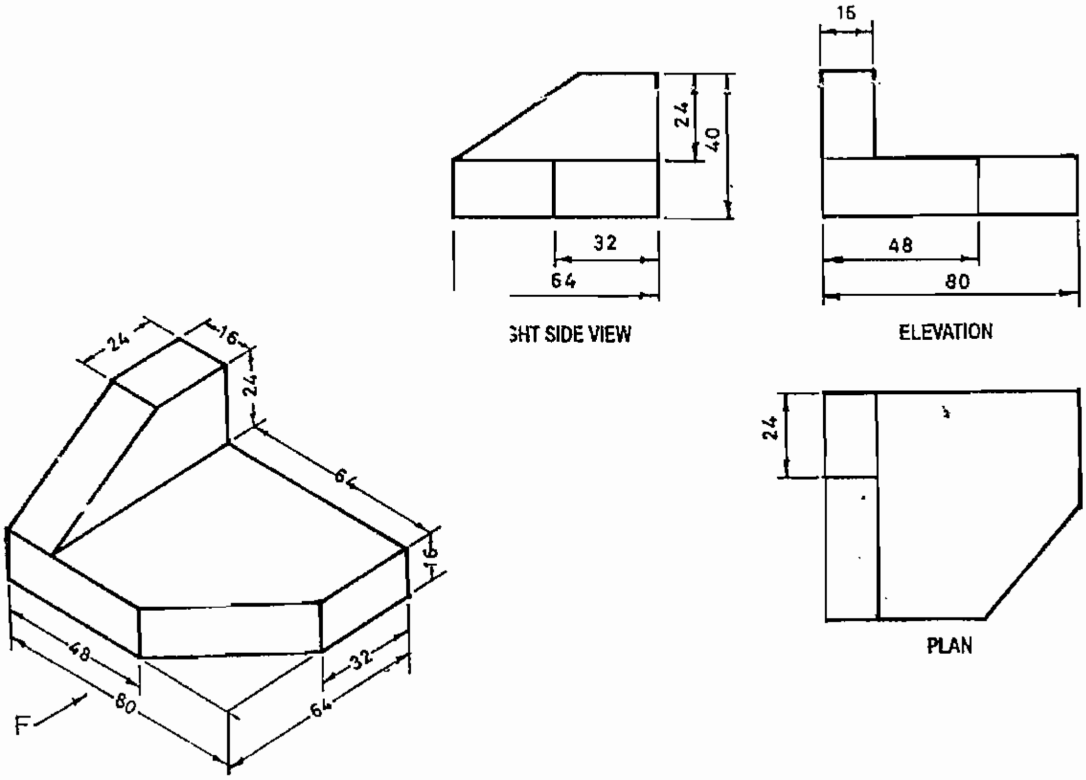

Example 4

Draw the Elevation looking from the direction of arrow FV, plan and Right side view, left side view for the pictorical view show in figure.

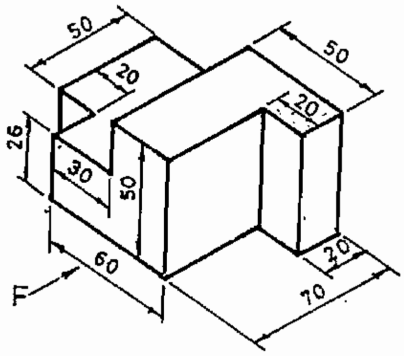

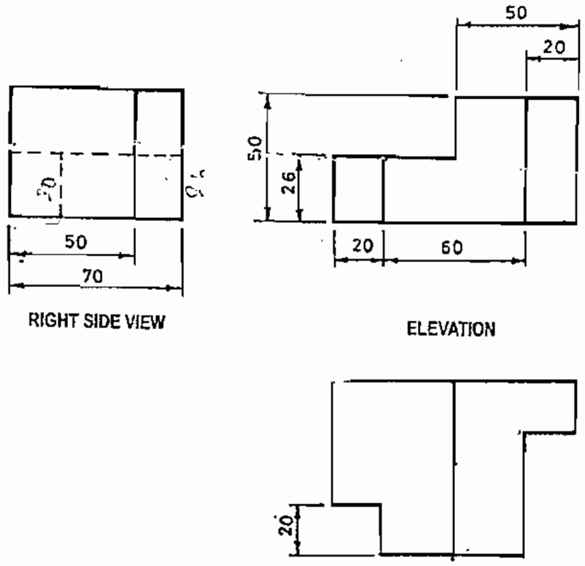

Example 5

Draw the Elevation looking from the direction of arrow FV, plan and Right side view, left side view for the pictorical view show in figure.

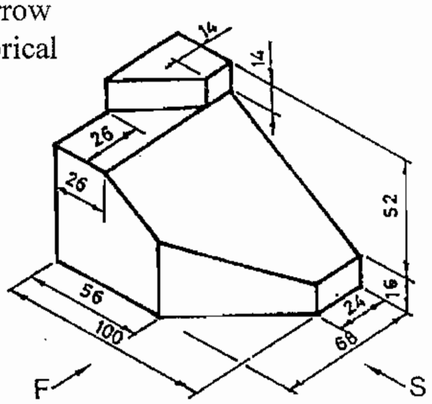

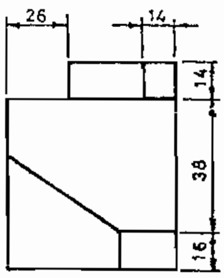

RIGHT SIDE VIEW

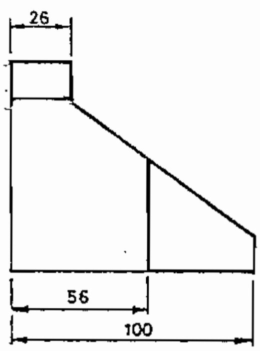

FRONT VIEW

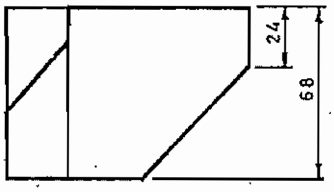

TOP VIEW

Example 6

Draw the Elevation looking from the direction of arrow FV, plan and Right side view, left side view for the pictorical view show in figure.

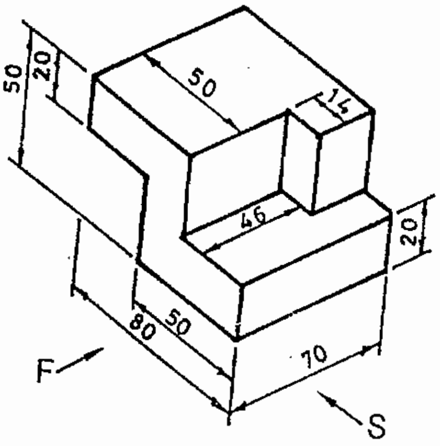

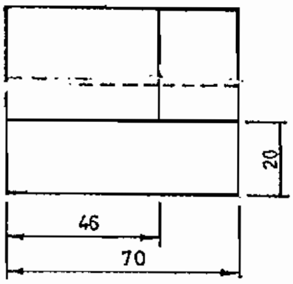

RIGHT SIDE VIEW

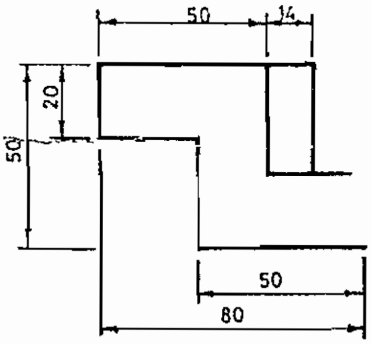

FRONT VIEW

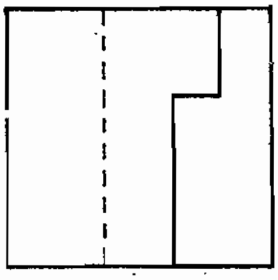

TOP VIEW

Example 7

Draw the Elevation looking from the direct: arrow FV, plan and Right side view, left side vie the pictorical view show in figure.

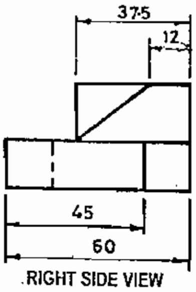

RIGHT SIDE VIEW

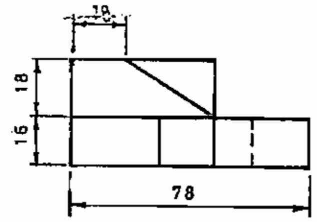

FRONT VIEW

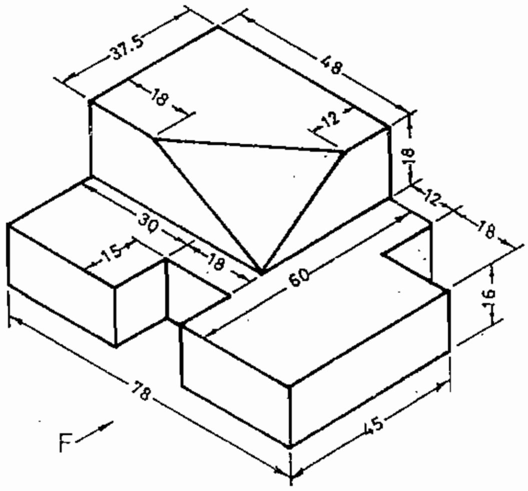

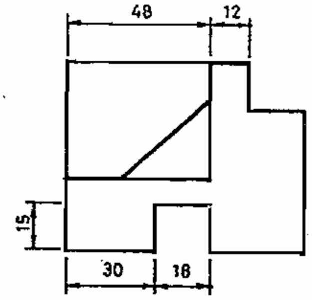

TOP VIEW

Example 8

Draw the Elevation looking from the direction of arrow FV, plan and Right side view, left side view for the pictorical view show in figure.

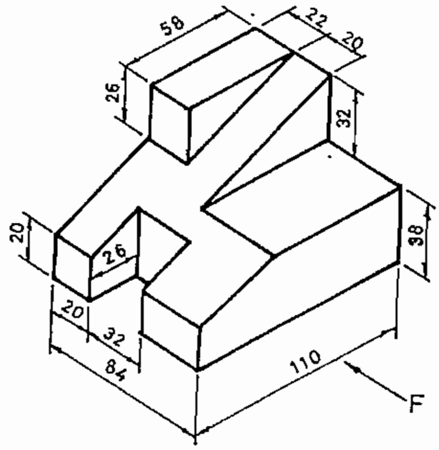

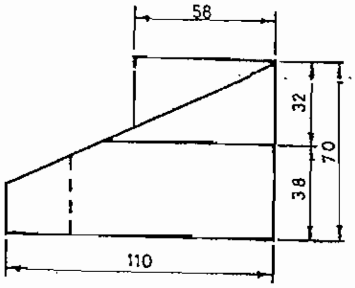

FRONT VIEW

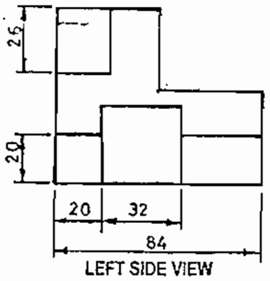

LEFT SIDE VIEW

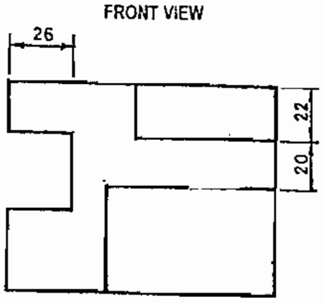

TOP VIEW

Example 9

Draw the Elevation looking from the direction of arrow FV, plan and Right side view, left side view for the pictorical view show in figure.

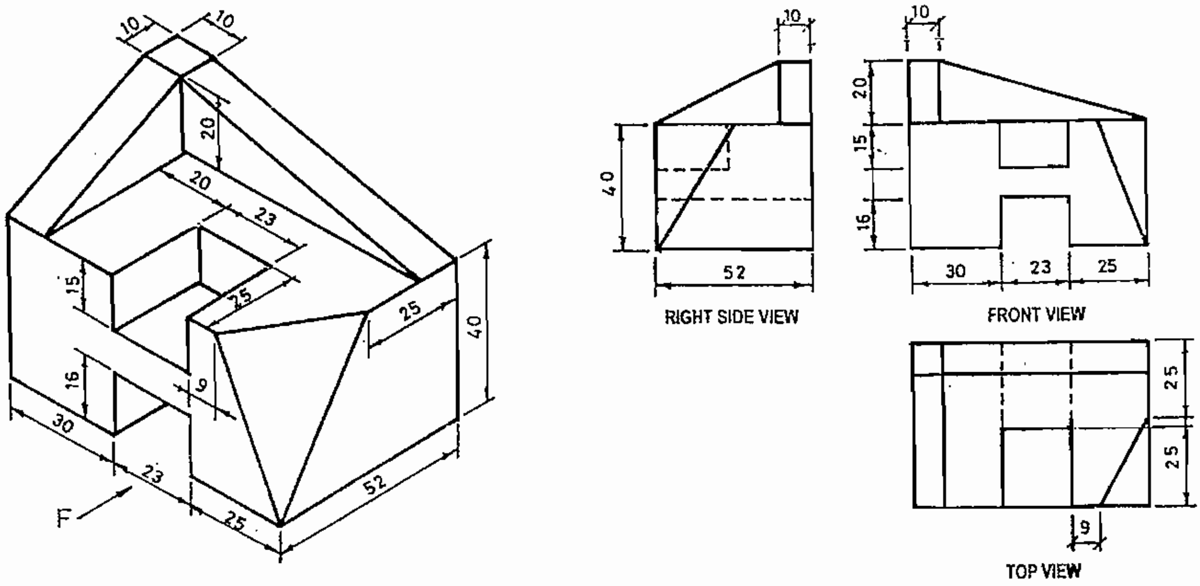

Isometric drawing

In an isometric drawing the three mutually perpendicular edges of a cube are at an angle of 120° with each other. Instead of drawing the edges in the above said way, first we can also start from point “a1. At this point also three mutually perpendicular edges met while two of these edges make 30° to horizontal, the other edge is vertical. After drawing two 30° lines and one vertical line, parallel lines are drawn to complete cube.

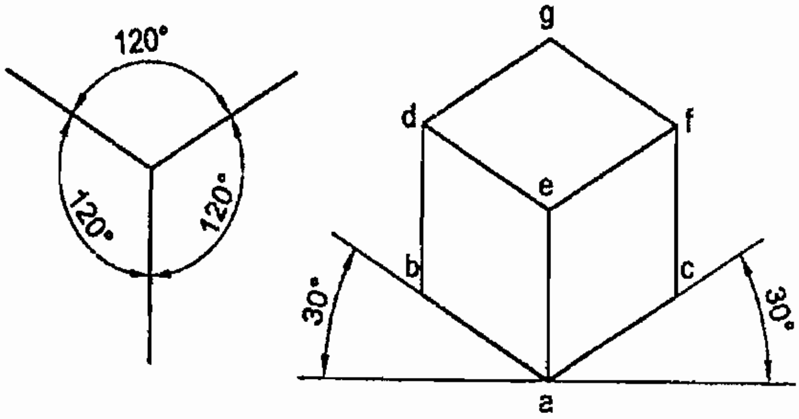

These three lines which represent the mutually perpendicular edges are isometric axes. Generally those axes are kept in four positions.

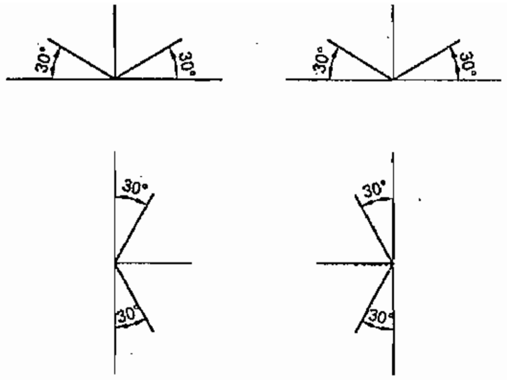

So to draw the isometric drawing, first draw the mutually perpendicular edges, set other linear dimensions and complete in figure.

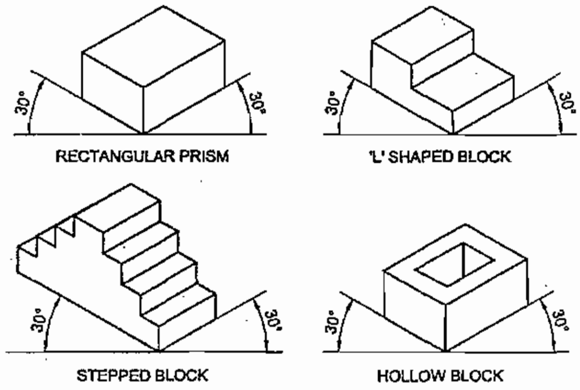

Isometric and non-isometric lines

Fig shows the isometric view of a shaped block. Here all lines except AB, BC and DE are parallel to isometric axis. Such lines which are parallel to. Isometric axes are called isometric lines whereas such lines AB, BC and DE which are not parallel to isometric axes are called non-isometric lines.

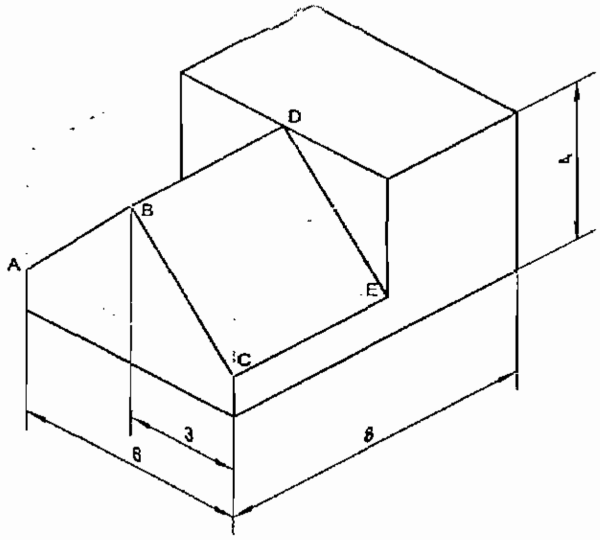

The length of non-isometric lines will not follow the scale used for isometric lines. To prove this point consider the non-isometric lines AB or BC. The true length of both AB and BC is 5 cm while BC will be longer. Because of this reason non-isometric lines are drawn first by locating their starting and end points on isometriciines.

To locate the end points and to draw the non-isometric lines two methods are employed. They are

- Box method
- Off-set method

Box method

The object is assumed to be inside a rectangular box. Starting and end points are located and marked. By joining the points isometric view is drawn.

Off-set method

This method is most suited for the objects consisting of number of planes at a number of different angles.

These methods are not only useful for isometric views involving non – isometric lines but also for the isometric views involving isometric lines.

Box method of drawing a pyramid

Example

Draw an isometric view for the triangular pyramid shown in fig using a box method.

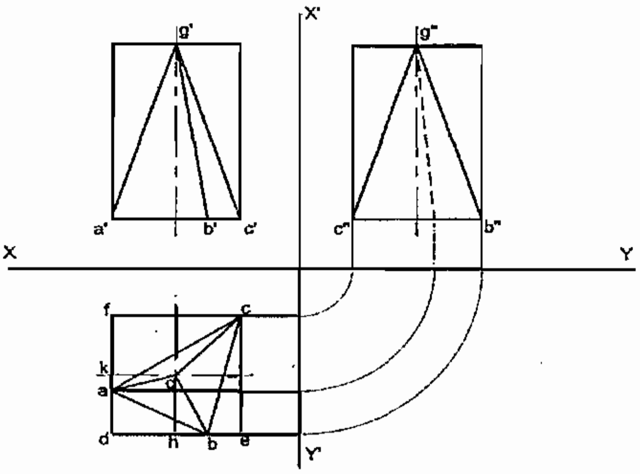

- Construct a rectangular box to the overall size of the pyramid
- Mark the distances ad and be from the plan of Fig in the base of the box.
- Mark the distance Kg and dh on the top face of box
- Join the points ab, ca, bg and cg and complete the isometric view of the pyramid in box method

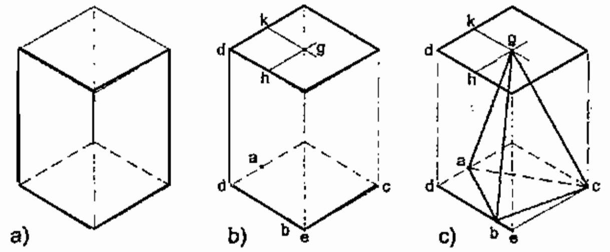

Angles in isometric drawing

The angles of inclined surfaces will not have the value in the isometric drawing, but will be more in some cases and less in other cases.

For example, in the isometric view of prism shown in Fig the true value of all the angles is 90°. But in isometric drawing the angles are 60° in some cases and 120° in others.

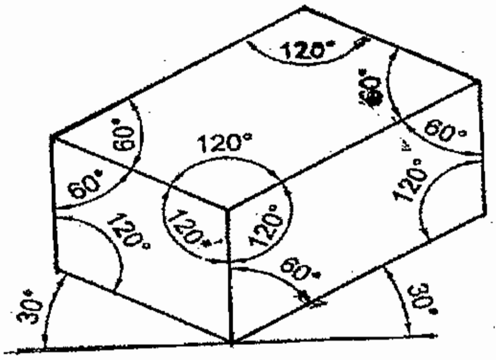

Isometric circles: The term isometric circle refers to the shape of circle in isometric view. An isometric circle will be elliptical in shape as shown in Fig. While drawing

Isometric view of cylindrical features isometric circles will have to be used.

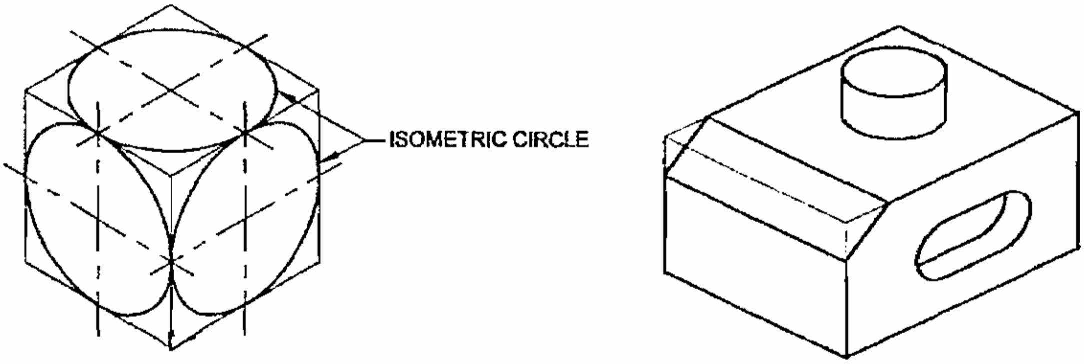

An isometric circle can be drawn either be plotting offset method or by are method.

Plotting method

- Draw a square of side equal to the dia of circle and inscribe the circle.
- Divide the circle into any number of equal parts and mark points such as 1,2,3,4,5,6,7,8 on the circle.

- Through the points 1,2,3 etc draw lines parallel to the both the axis of cylinder.
- Draw isometric view of the square.
- Mark points corresponding to 1,2,3 ......8 with isometric view of the square as points 1, 2,3 8
- Join these points with a smooth curve to for an ellipse.

Note: The orientation of the isometric circle with depend upon the plane on which the circular feature exists.

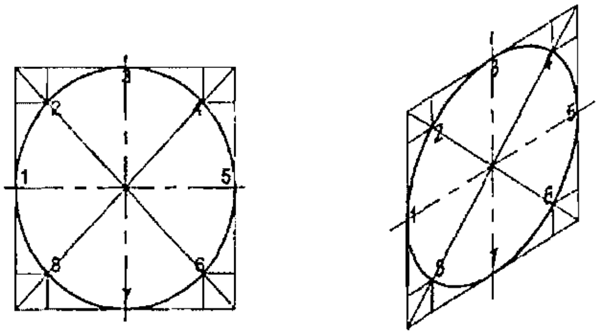

Isometric drawing

Draw the isometric figures. Follow the procedure given wherever necessary.

Procedure

Exercise

Draw the isometric drawing of a rectangular prism of base 30 mm x 15 mm and the height 50 mm.

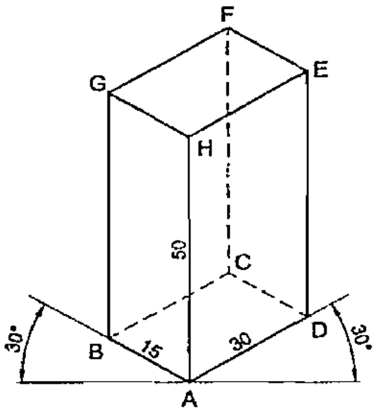

- Draw the three isometric axes through point 'A'.
- Mark AB = 15 mm, AD = 30 mm and AH = 50 mm representing the three sides of prism.
- Draw two vertical lines parallel to the line AH through points B and D.
- Similarly draw two more lines parallel to AB and AD through point H.

- Mark G and E the intersecting points.
- Draw lines parallel to GH and HE through points G and E intersecting point is F.
- Draw lines parallel to AB & AD through points D and B respectively intersecting at C.
- Join CB & CD with dash lines.
- Join F and C also with dash lines.
- Rub off the construction lines and complete the prism.

Exercise

Draw the isometric view of the stepped block given in Fig.

- Draw the isometric view of a rectangular prism of dimensions equal to the overall size of the block 45 x 25 x 30 mm.
- Draw the lines JD, DE, EF, FH, HI and U using the measurements given in the figure.
- Rub off SR, RD, SJ, SH and RF
- Darken the remaining lines of the stepped block.

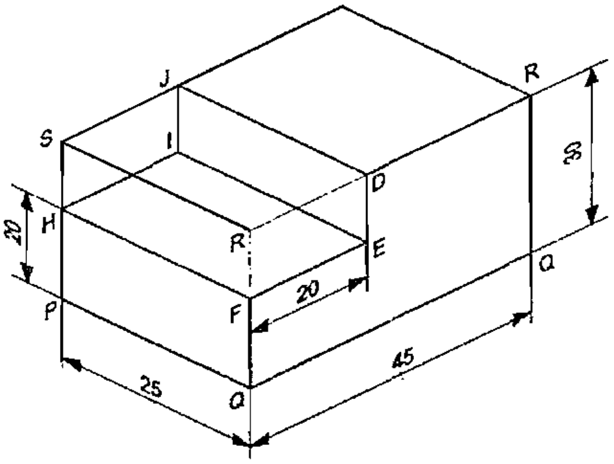

Exercise

Draw the isometric view of the components shown.

- Draw the stepped block as per dimension. Follow the procedure given in the previous.
- Mark points UTSV as per dimension on the top of the surface EDGF.
- Join points UTSV.
- Project vetically downwards from the points UTSV and obtain the point WXYZ at bottom surface such that UW, TX, SY & VZ areequal to10 mm. Join the point WXYZ and draw the thick lines which are all visible and dotted lines which are not visible.

(a)

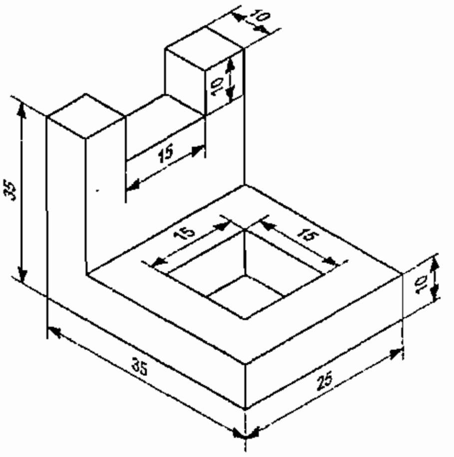

(b)

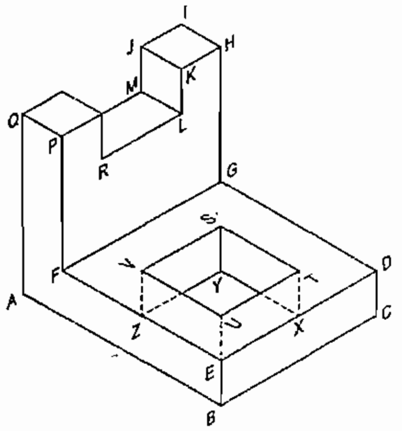

Note: All construction lines should be in thin fines. After completion of the isometric views, in each case erase the unwanted lines and construction lines.

With the experiences gained in previous exercises, of drawing isometric views.

Exercise

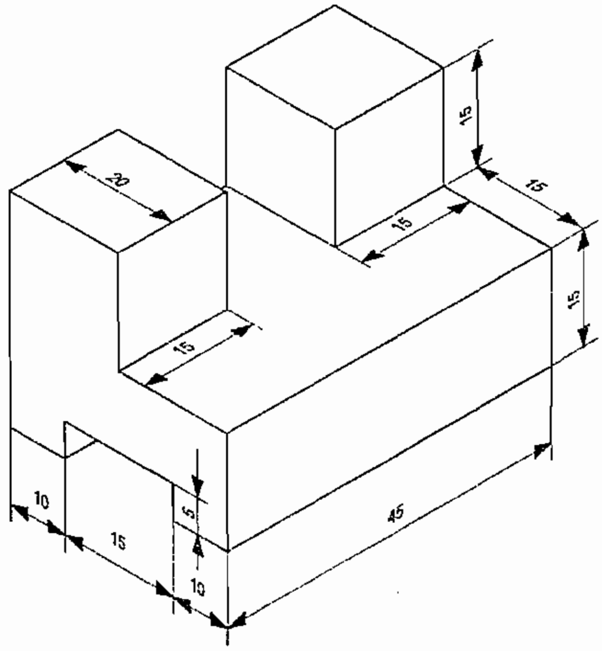

Exercise

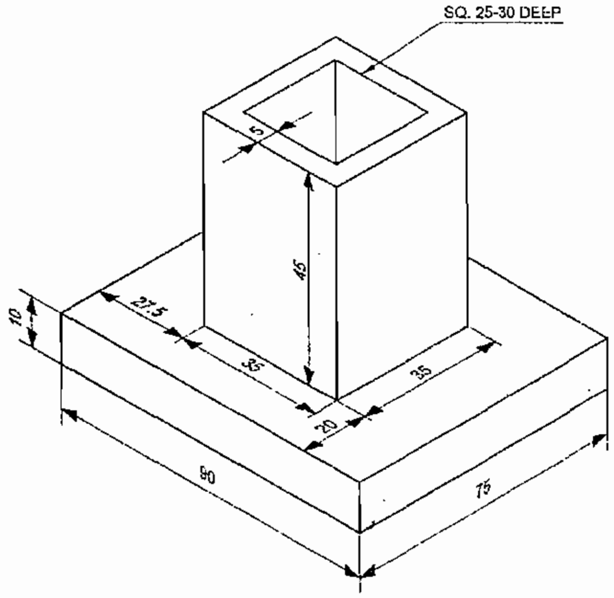

Draw the isometric view of the machined block having non isometric lines.

(a)

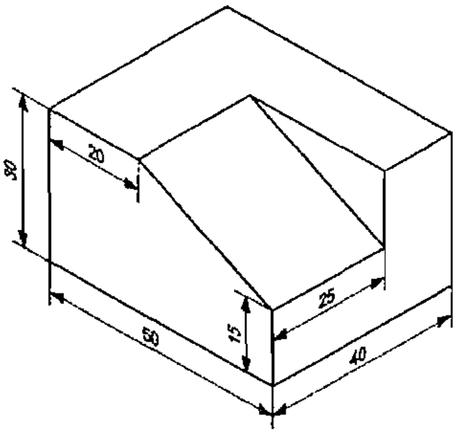

(b)

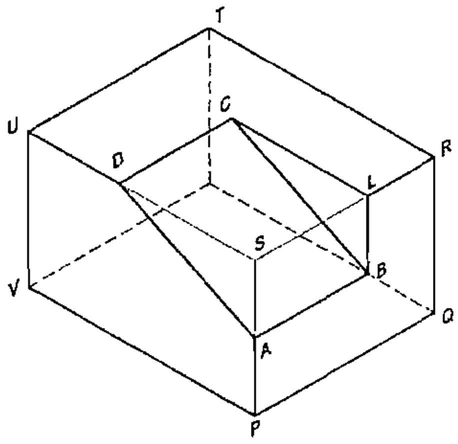

- Draw an isometric box.
- Mark point A on PS at a distance of 15 mm from P.
- Draw line AB = 25 mm parallel to PQ.
- From B, draw a vertical line cutting RS at L.
- Mark point D on US such that UD = 20 mm.
- Draw a line DC parallel to UT equal to AB.
- Join AD, BC and CL to complete the required isometric view of the block.
- Remove the extra lines and darken the required visible edges.
- Show hidden edges by dashed lines.

Exercise

- Draw the isometric view of the 'V block.
- Draw the isometric view of a rectangular box of size 50 x 40 x 30.
- On the face ABFE, draw the lines JN & LN by offset method.
- Similarly draw lines KP & MP.
- Join ML, KJ and PN.
- Erase construction lines and make the remaining line thick and dashes according to the drawing.

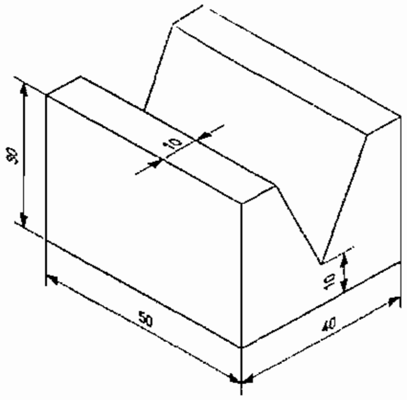

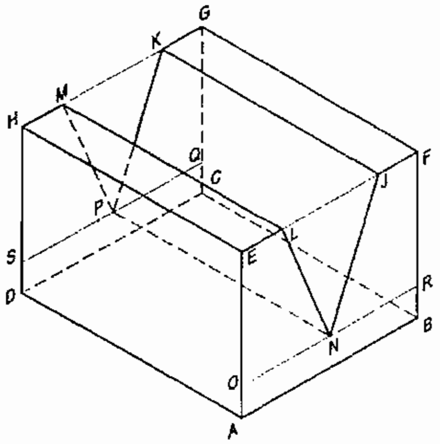

Exercise

Draw the isometric view of a cylinder of base 5dmm"and height/length of 70 mm with its base resting on horizontal surface by offset method and four centre arc method.

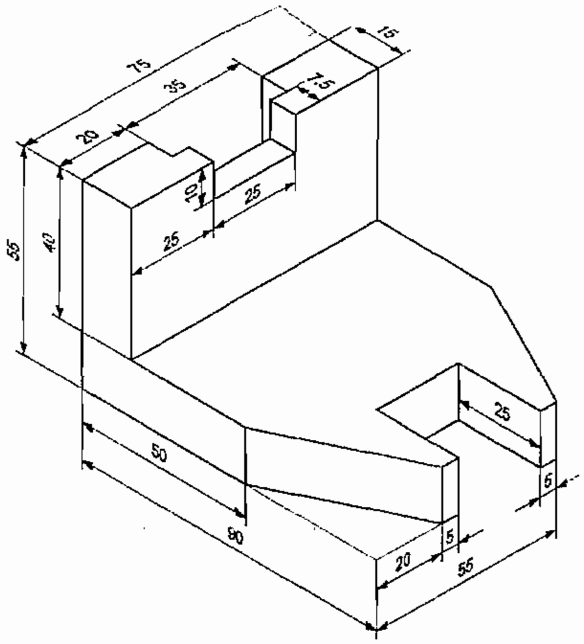

Off-set method

- Draw the shape of the cylinder looking from front and top.
- Draw the isometric view of a square of side equals to the dia of cylinder.
- Draw the isometric view of a square prism of height 70 mm on the square drawn.
- The mid-points of the sides of the square given four points ABCD and four more points HUG by intersection of the diagonals with circles (located by off-set method) join the points to form isometric circle.

- Draw the isometric circles for the bottom and top face of the cylinder inside the square prism using offset method.
- Draw common tangents to top and bottom of isometric circles.
- Complete the view by drawing visible lines thick and invisible lines thin.

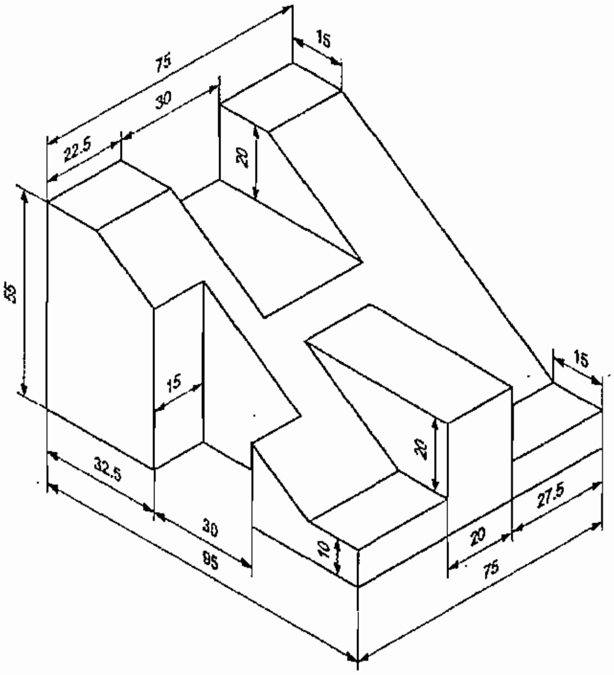

Exercise

Draw the isometric view of a cone whose basediameter 40 mm and height 60 mm when its base rest on horizontal plain surface.

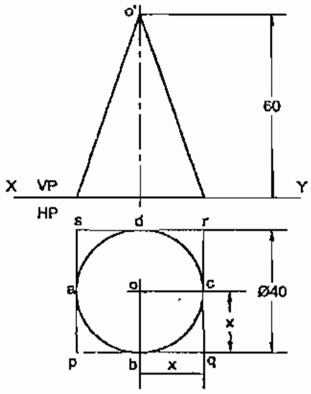

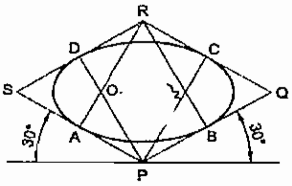

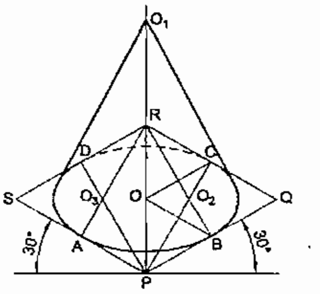

- Draw the front view and plan of the cone in the true scale as shown in the Fig.
- Draw the isometric view of the base circle, (by four centre method)
- Mark the centre and draw a vertical line 0.0, such that 0.0, equals to 60 mm in isometric scale.
- From '0' draw tangents to the isometric circle of the base and complete the required isometric view of the cone.

Exercise

Draw the isometric view of the hexagonal prism of 2.5 cm side of base and 60 mm height.

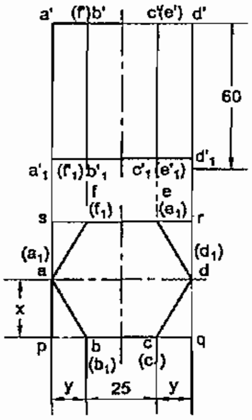

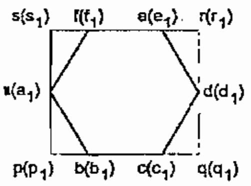

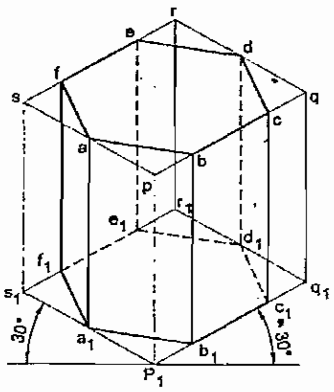

- Draw a hexagon of side 25 mm of its edge is horizontal.
- Draw a rectangular prism of side 25 mm and height 60 mm
- Draw the isometric view of the hexagonal base a1b1c1d1e1f1 of the prism using offset method.
- Draw the top hexagonal face by drawing projection from the corners of the base.
- Make the visible edges by drawing thick lines and draw the invisible edges in hidden line.
- Rub off the unwanted lines and complete the isometric projection.

DRAW THE PLAN, ELEVATION AND SIDE VIEW OF THE ENGINEERING MODELS

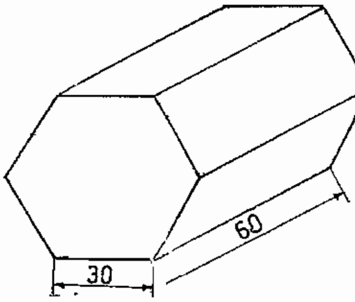

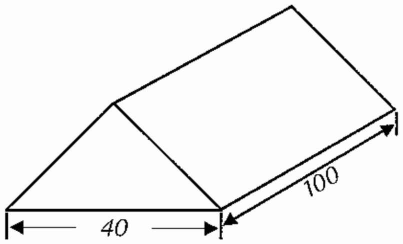

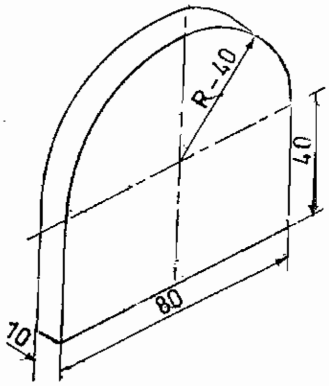

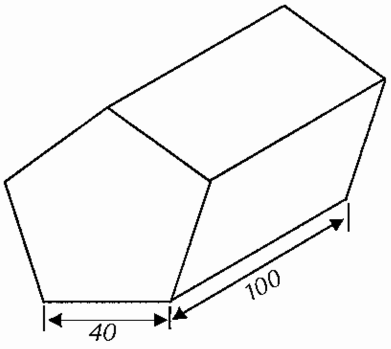

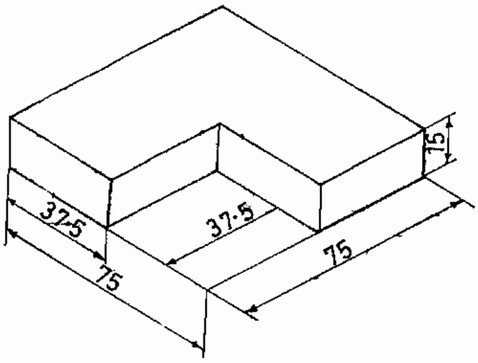

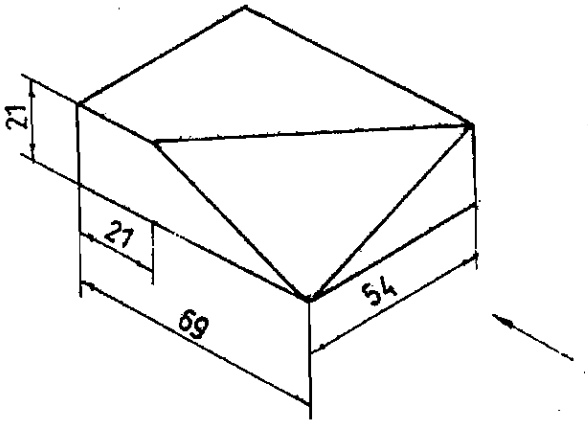
21
21
69
54

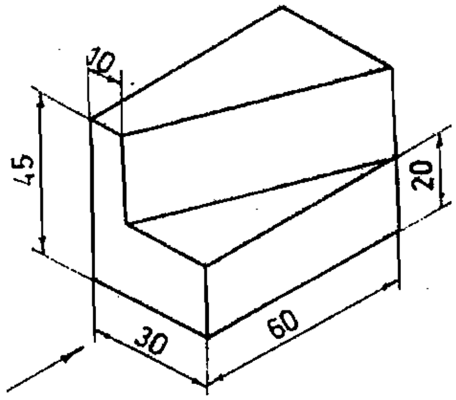
10
45
20
30
60

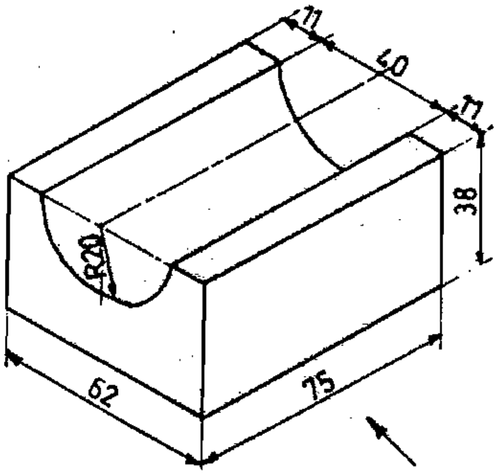
11
40
11
R20
38
62
75

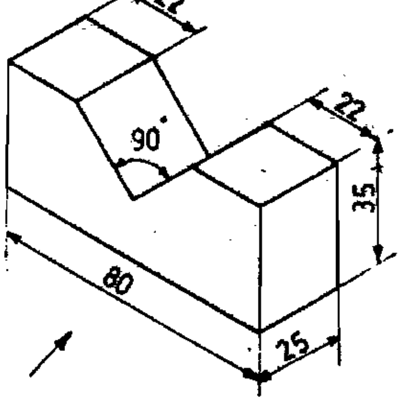
22
22
90°
35
80
25

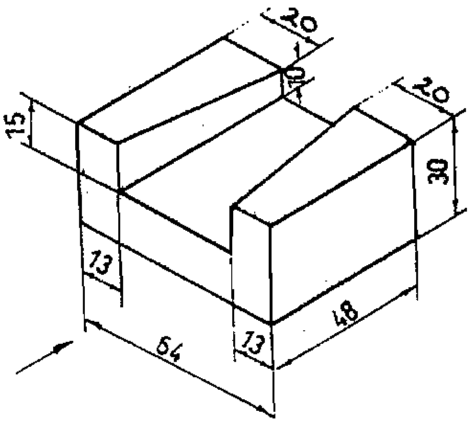
20
10
20
15
30
13
13
48
64

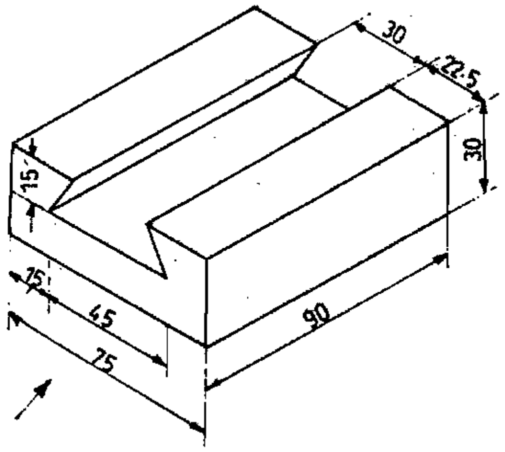
30
22.5
30
15
15
45
75
90

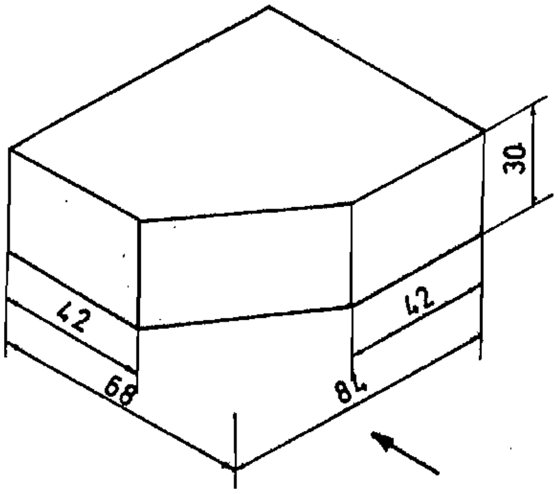
30
42
42
68
84

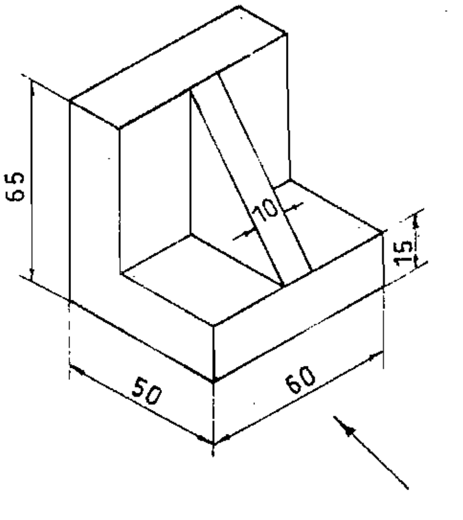
65
10
15
50
60

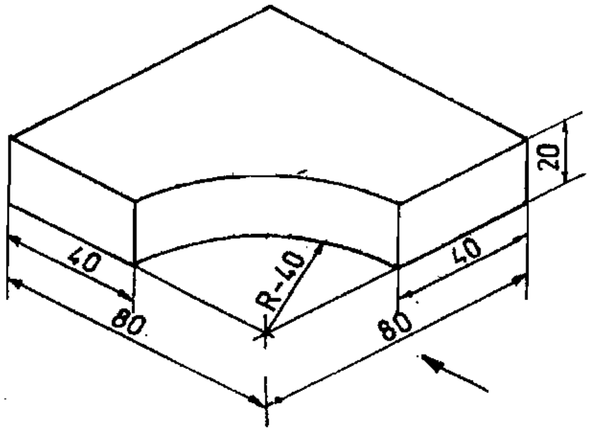
20
40
40
80
80
R-40

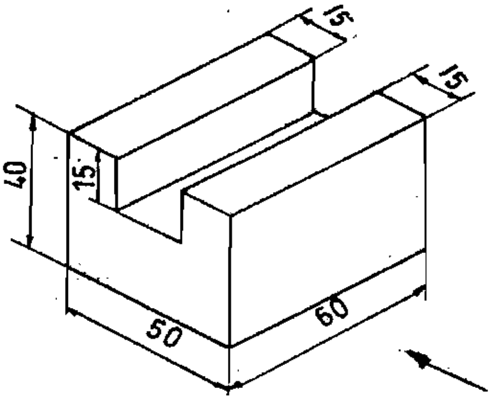
15
15
40
15
50
60

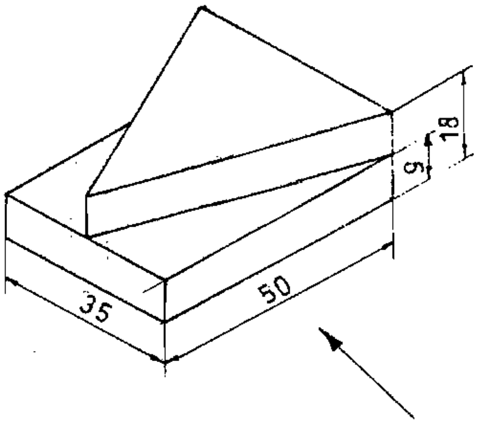
18
9
35
50

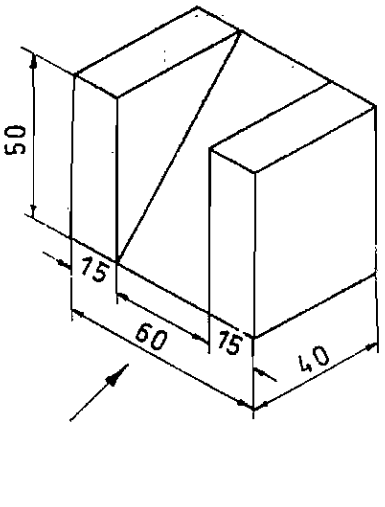
50
15
60
15
40

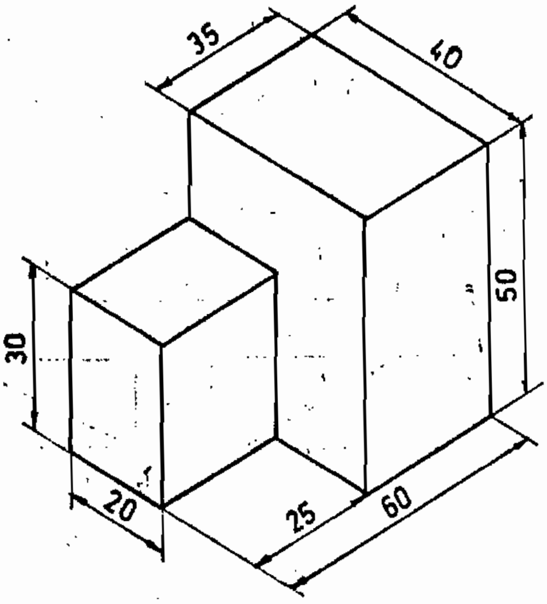
35
40
30
50
20
25
60

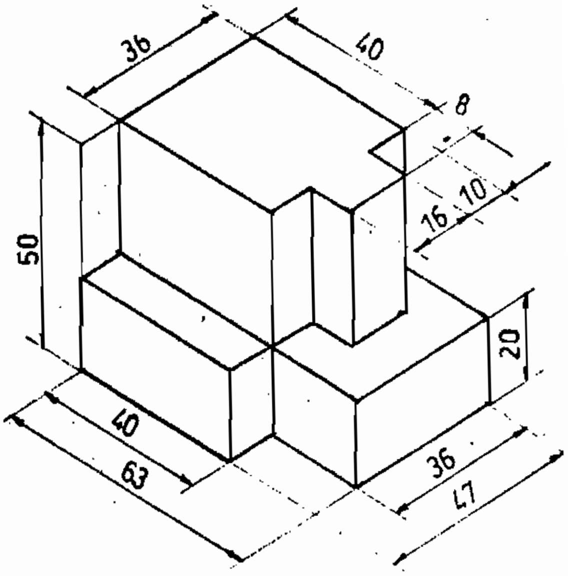
36
40
8
50
16
10
20
40
63
36
47

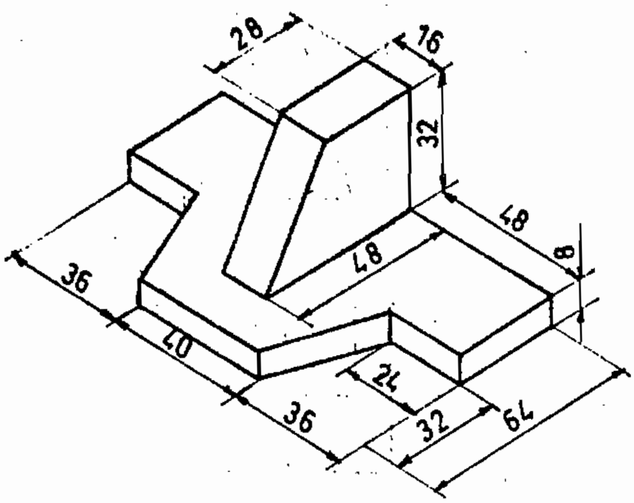
28
16
32
48
48
8
36
40
24
36
32
64

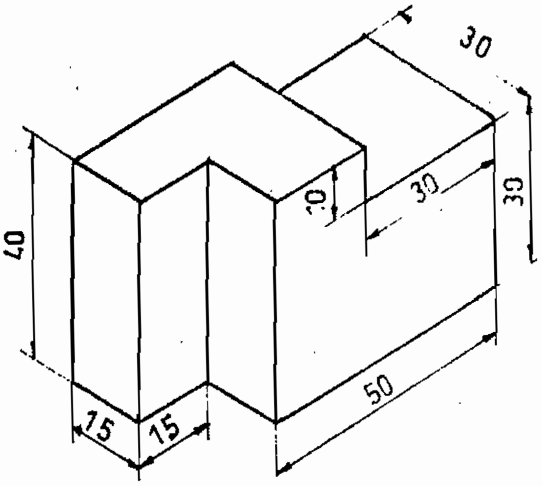
30
40
10
30
30
15
15
50

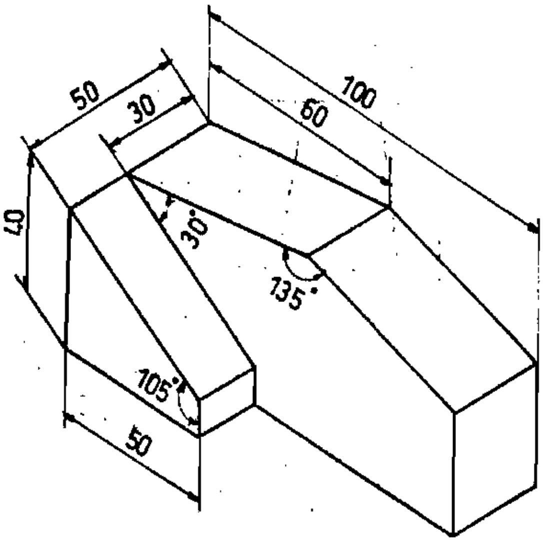
50
30
60
100
40
30°
135°
105°
50

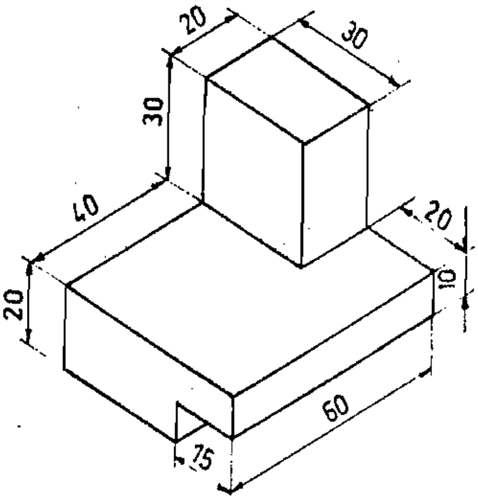
20
30
30
40
20
20
10
60
15

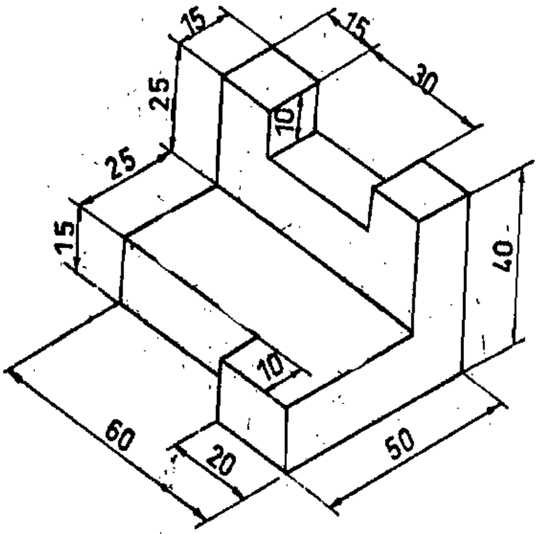
15
15
30
25
10
25
15
40
10
60
20
50

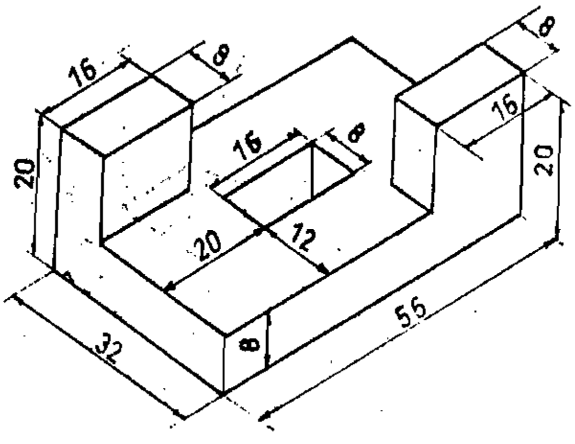
16
8
8
16
16
8
20
20
12
20
8
32
56

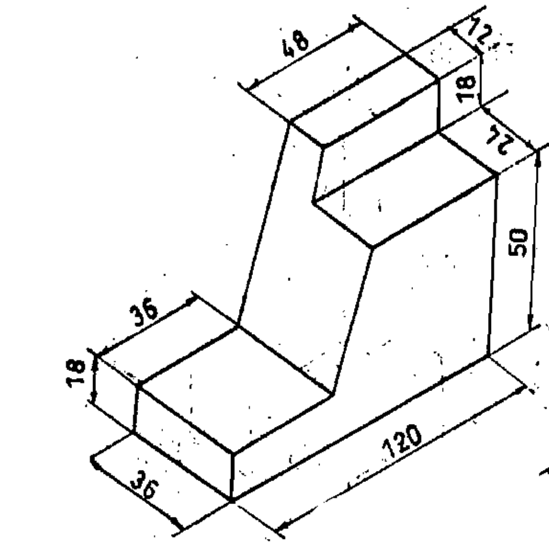
48
18
24
50
36
18
120
36

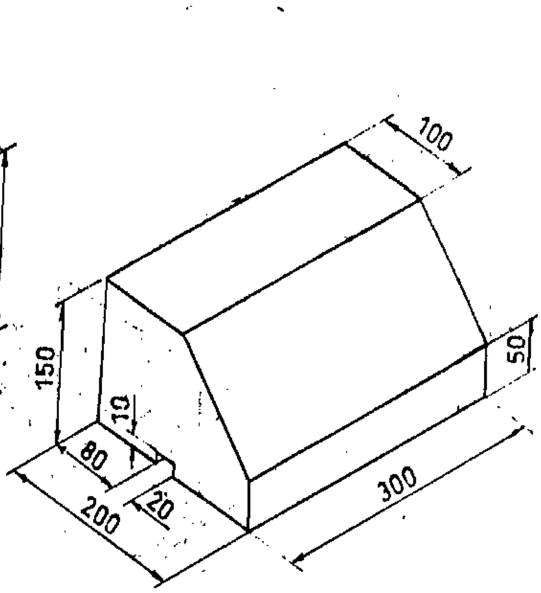
100
150
50
10
80
200
20
300

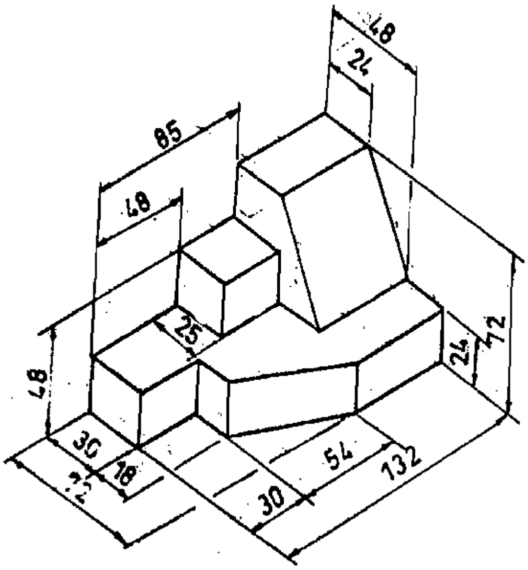
48
24
85
48
25
48
24
72
30
18
30
54
132

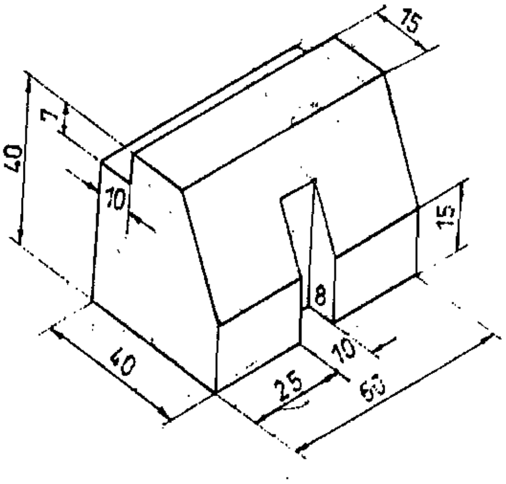
15
40
7
10
15
8
40
25
10
60

4. A.C / D.C. MOTOR STARTER

A.C. MOTOR STARTER

4.1 Direct on line starter D.O.L Starter

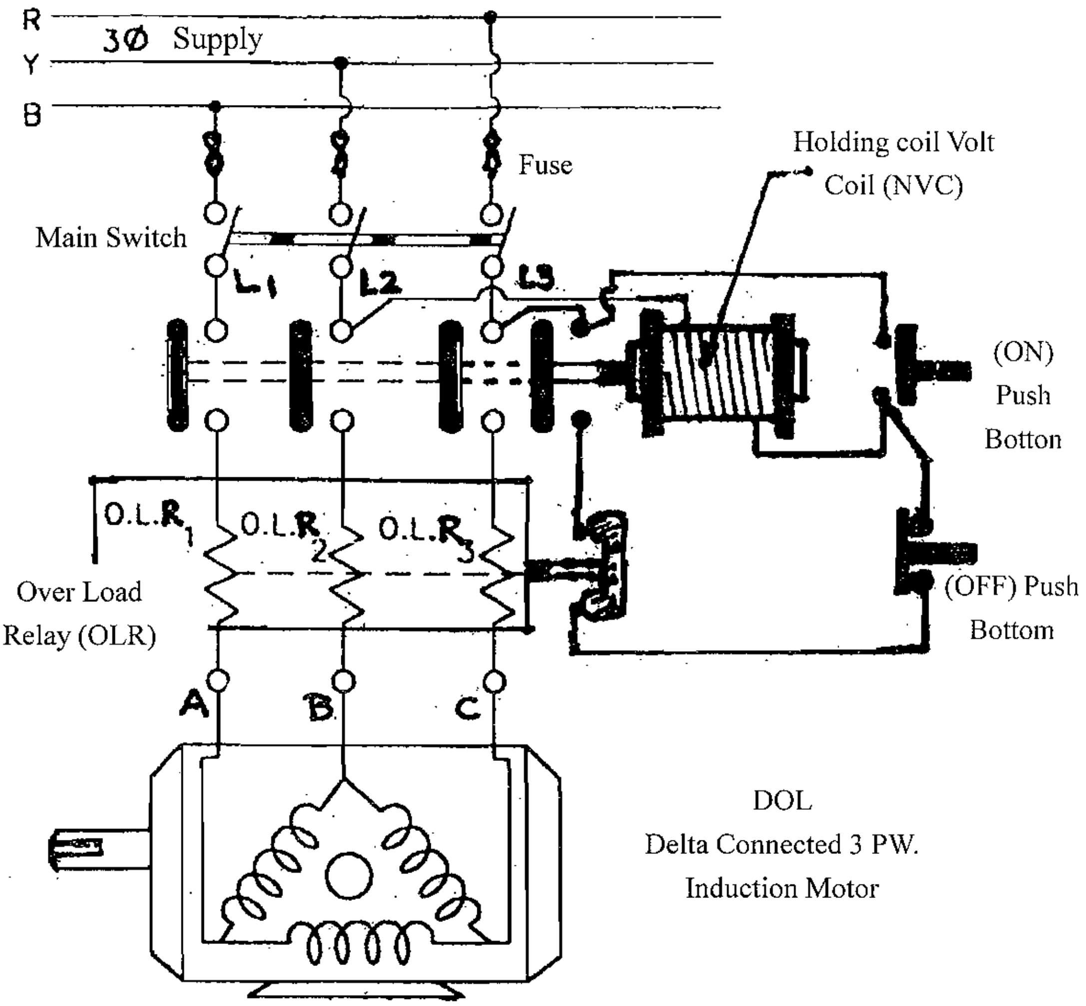

4.2. A.C 3 Phose Star Delta Starter

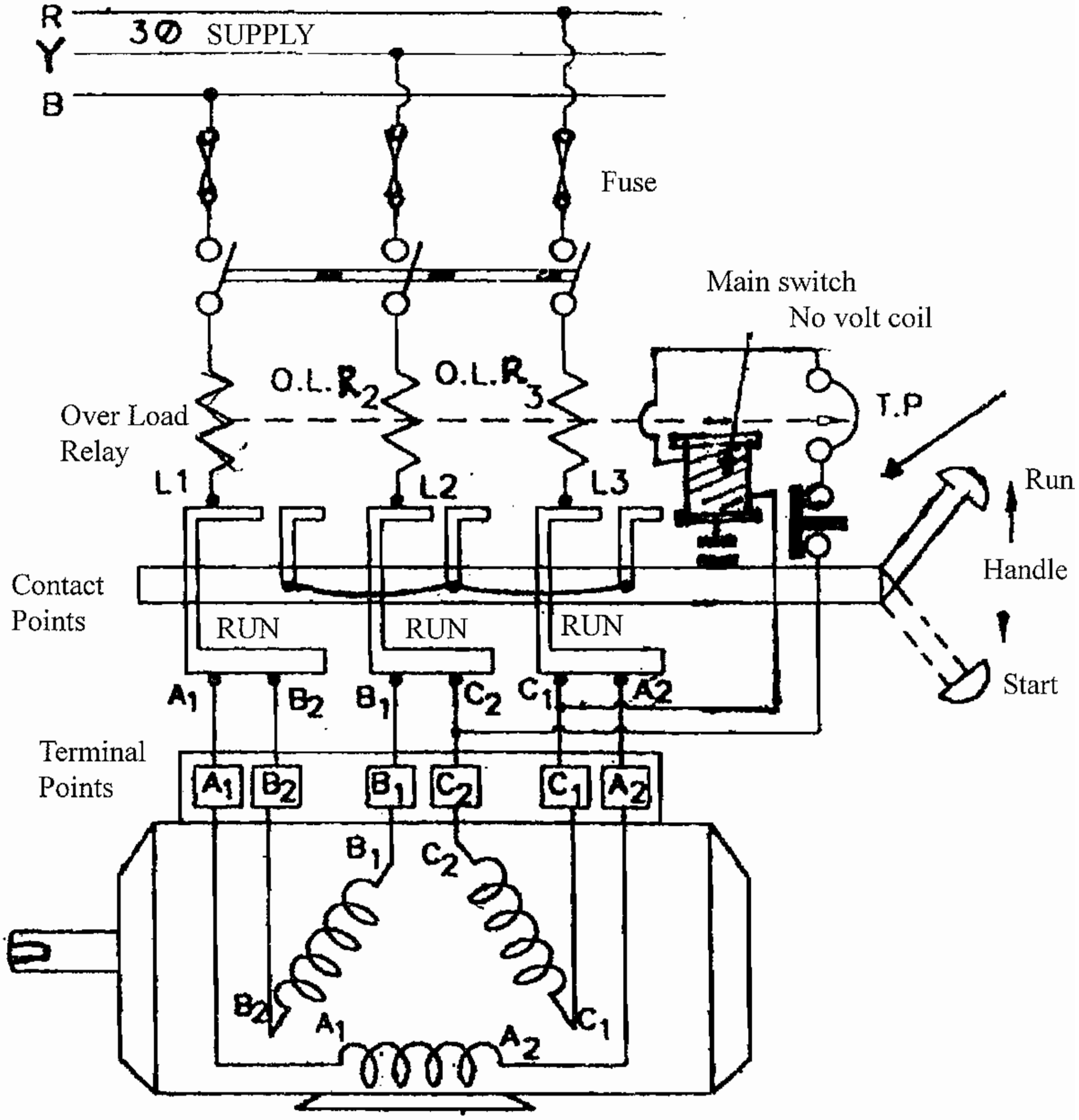

STAR - DELTA
Starter for
3 ph. Induction Motor

4.3 Phase Auto transformer starter

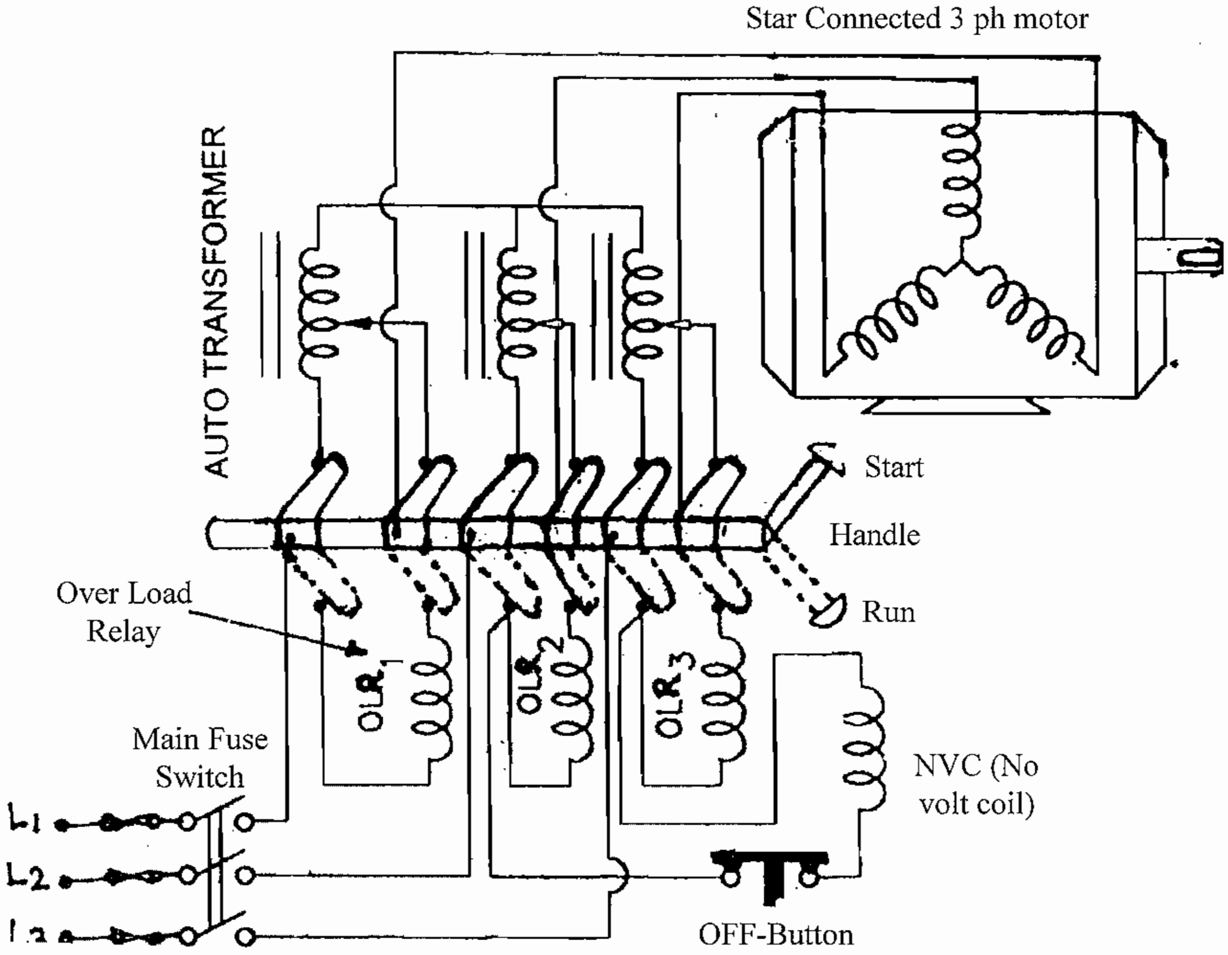

4.4 Slip sing and Rotor resistance starter

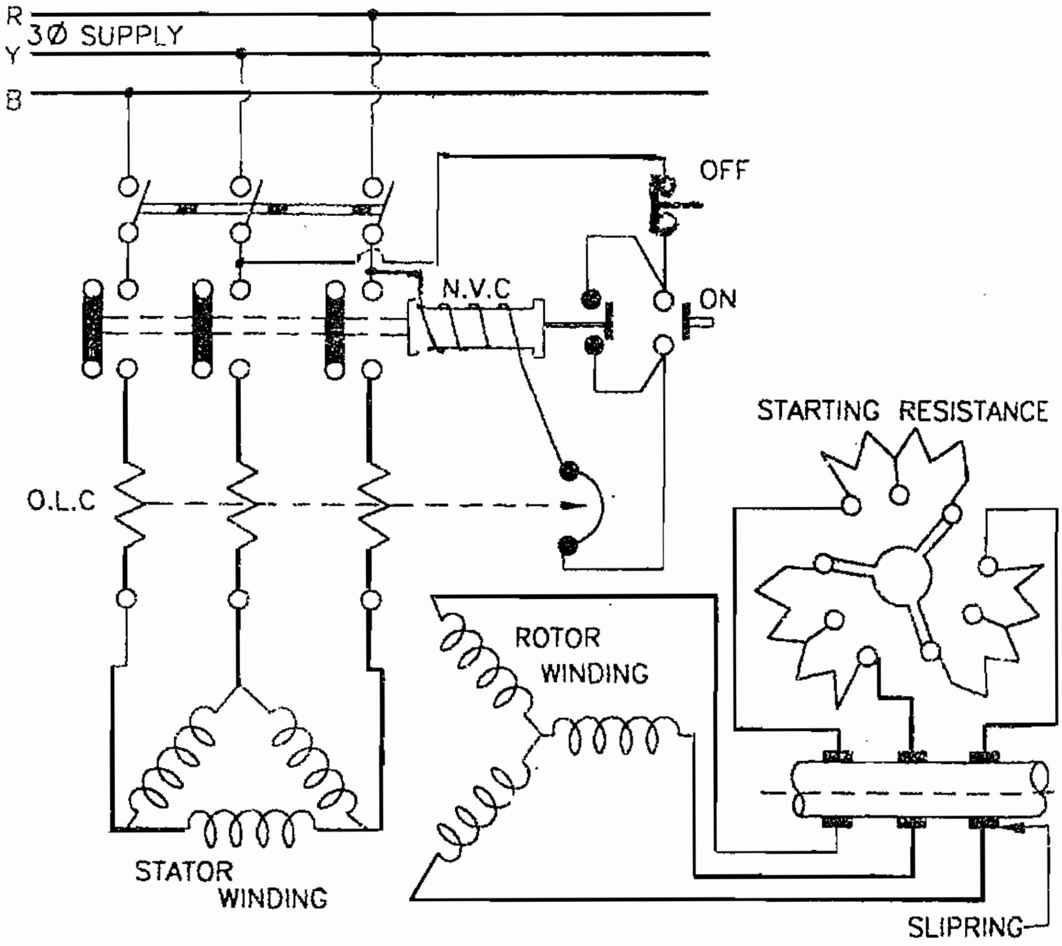

D.C. MOTOR STARTER

4.5. Three point starter

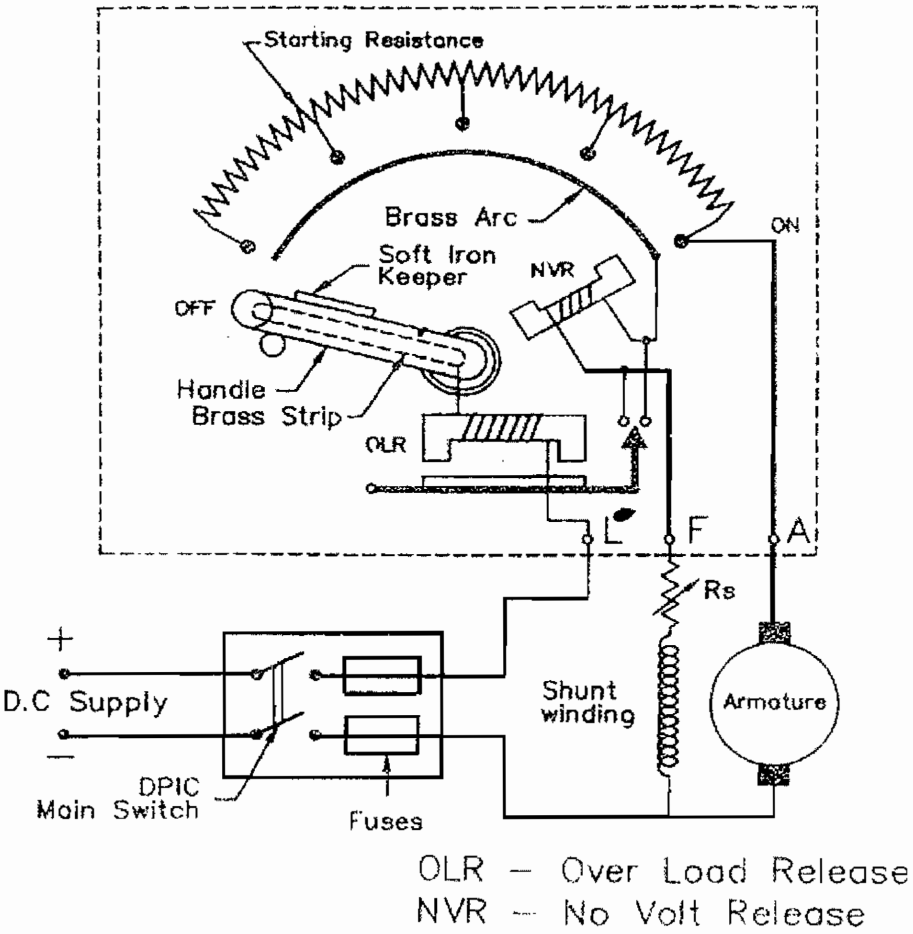

THREE POINT STARTER

4.6 Four Point Starter

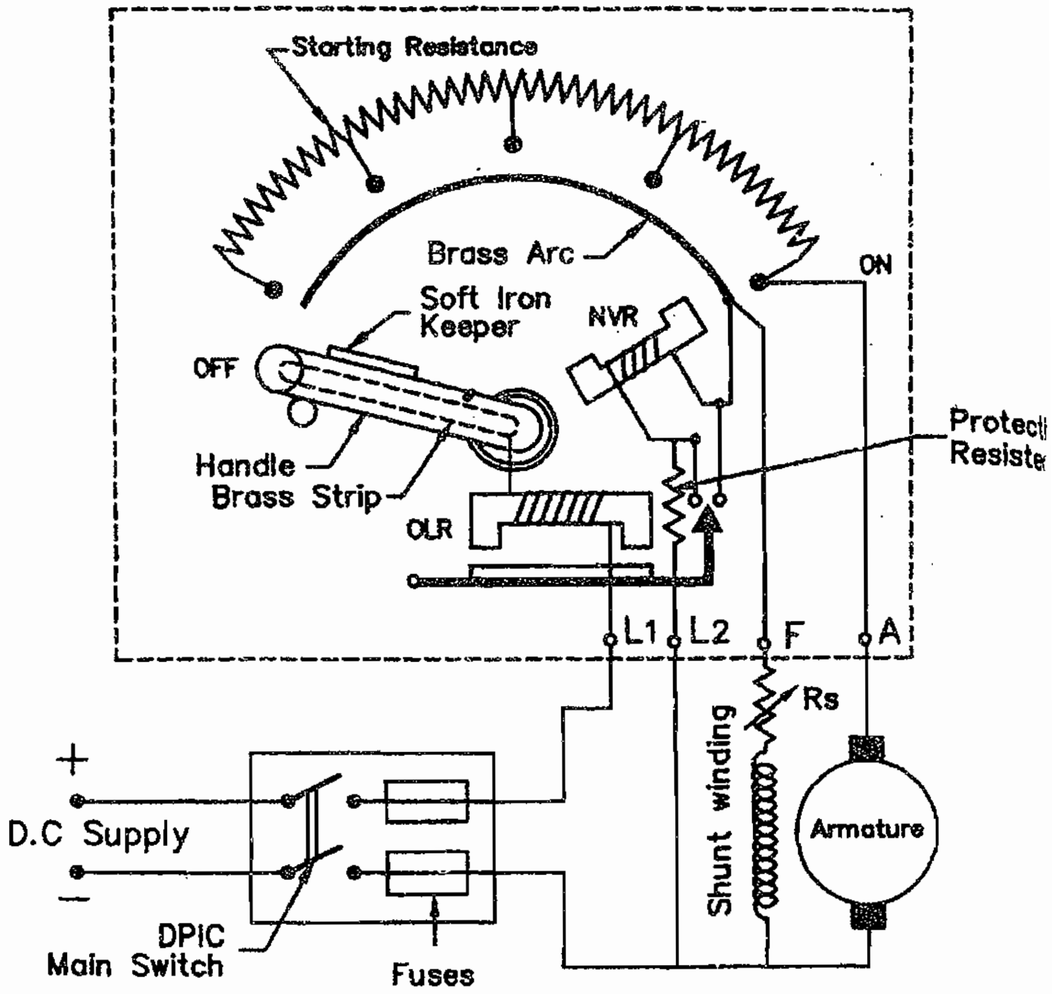

OLR - Over Load Release
NVR - No Volt Release

FOUR POINT STARTER

5. ELECTRICAL SYMBOLS

S.No.	ELECTRIAL TERMS	ELECTRIAL (ISI) SYMBOLS.
1.	DIRECT CURRETN (D.C.)	———
2.	ALTERNATING CURRENT (A.C.)	
3.	POSITIVE	+
4.	NEGATIVE	–
5.	D.C. AND A.C. CURRENT	
6.	SINGLE PHASE	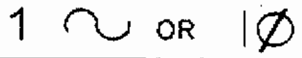
7.	THREE PHASE	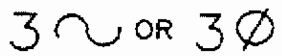
8.	NETURAL LINK	
9.	PHASE REWIRABLE FUSE	
10.	EARTH	
11.	LAMP	
12.	LAMP IN SERIES	
13.	LAMP IN PARALLEL	
14.	ONE WAY SWITCH	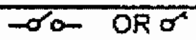
15.	TWO WAY SWITCH	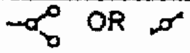
16.	PUSH BUTTEN SWITCH	
17.	PENDENT SWITCH	
18.	INTERMEDIATE SWITCH	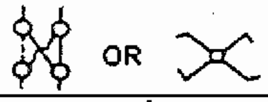
19.	DOUBEL POLE SWITCH	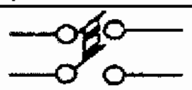
20.	TRIPLE POLE SWITCH	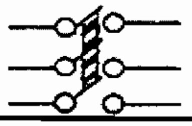

S.No	ELECTRIAL TERMS	ELECTRIAL (ISI) SYMBOLS.
21.	DOUBLE POLE IRON CLAD SWITCH WITH FUSES	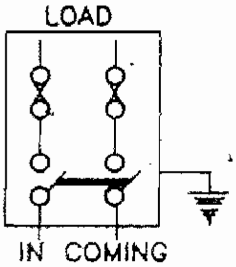
22.	TRIPLE POLE IRON CLAD SWITCH WITH FUSES	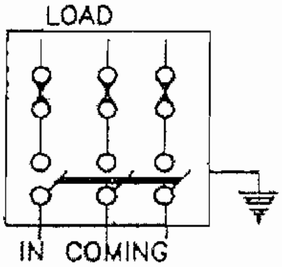
23.	TRIPLE POLE IRON CLAD SWITCH WITH CHANGE ITS DIRECTION OF ROTATION	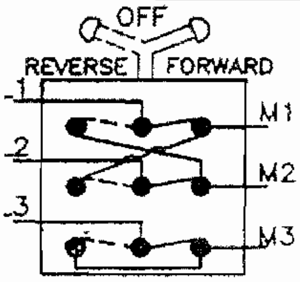
24.	OIL IMMERSED SINGLE POLE SWITCH	
25.	OIL IMMERSED DOUBLE POLE SWITCH	
26.	SOCKET OUT LET 5 AMPS	
27.	SOCKER OUT LET 15 AMPS	
28.	SOCKET OUT LET 5 AMPS WITH SWITCH	
29.	SOCKETOUTLET15AMPSWITH SWITCH	
30.	TWO PIN WALL SOCKET	

S.No.	ELECTRIAL TERMS	ELECTRIAL (ISI) SYMBOLS.
31.	THREE PIN WALL SOCKET	
32.	TWO PLATE CEILING ROSE	
33.	THREE PLATE CEILING ROSE	
34.	LAMP OUT LET	
35.	SINGLE LAMP	
36.	EMERGENCY LAMP	
37.	BULK HEAD FITTING	
38.	WATER TIGHT LIGHT FITTING	
39.	BATTERN LAMP HOLDER	
40.	PENDENT LIGHT SINGLE	
41.	PENDENT ROD	
42.	FLOURSCENT LAMP	
43.	CHOKE COIL	
44.	CEILING FAN	
45.	BRACKET FAN	
46.	EXHAUST FAN	
47.	FAN REGULATOR	OR
48.	BELL	
49.	BUZZER	
50.	FIRE INDICATOR	

S.No.	ELECTRIAL TERMS	ELECTRIAL (ISI) SYMBOLS.
51.	CONVECTION HEATER	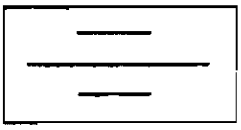
52.	HEATER	
53.	STORAGE TYPE ELECTRICAL WATER HEATER	
54.	TUBULAR HEATER	
55.	ELECTRIC HEATER UNIT	
56.	IMMERSION HEATER	
57.	THERMOSTAT	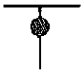
58.	IMMERSION HEATER THERMOSTAT	
59.	SIREN	
60.	HORN OR HOOTER	
61.	MIRCO PHONE	
62.	LOUD SPEAKER	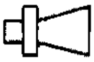
63.	AMPLIFIER	
64.	CONTROL BOARD	
65.	RECEIVER POINT	
66.	AERIAL	
67.	SYNCHRONOUS CLOCK OUTLET	

S.No.	ELECTRIAL TERMS	ELECTRIAL (ISI) SYMBOLS.
68.	MASTER CLOCK	
69.	BELL CONNECTED TO FIRE ALARAM SWITCH	
70.	CELL	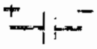
71.	BATTERY	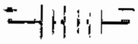
72.	FIXED RESISTANCE	
73.	VARIABLE RESISTANCE	
74.	COIL (INDUCTIVE COIL)	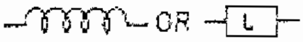
75.	VARIABLE INDUCTIVE COIL	
76.	FIXED CONDENSER	
77.	VARIABLE CONDENSER	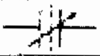
78.	SERIES IMPEDENCE	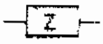
79.	ELECTRO STATIS SCREENING	
80.	MAGNETIC SCREENING	
81.	AMPERE METER OR AMMETER a) A.C. (ALTERNATIVE CURRENT)	
	b) DIRECT CURRENT	
	c) A.C. / DIRECT CURRENT	
82.	VOLE METER a) A.C. (ALTERNATIVE CURRENT)	
	b) DIRECT CURRENT	
	c) A.C. / DIRECT CURRENT	

S.No.	ELECTRIAL TERMS	ELECTRIAL (ISI) SYMBOLS.
83.	WATT METER	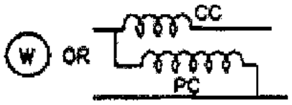
84.	OHM METER	
85.	MULTIMETER	
86.	PHASE INDICATOR METER	
87.	POWER FACTOR METER	
88.	FREQUENCY METER	
89.	GALVANOMETER	
90.	THERMOMETER OR PYROMETER	
91.	TACHOMETER	
92.	SYNCHROSCOPE	
93.	SINGLE PHASE ENERGY METER	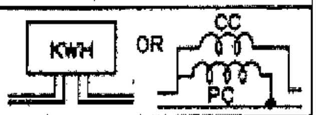
94.	POWER FACTOR METER	
95.	ENERGY METER	
96.	WINDING	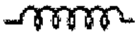
97.	SERIES WINDING	
98.	SHUNT WINDING	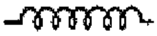
99.	BRUSH ON SLIP RING	

S.No	ELECTRICAL TERMS	ELECTRIAL (ISI) SYMBOLS.
100.	BRUSH ON COMMUTATOR	
101.	GENERATOR	
102.	MOTOR	
103.	MOTOR GENERATOR SET MECHANI-CALLY COUPLED	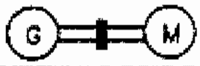
104.	D.C. GENERATOR	
105.	D.C. MOTOR	
106.	D.C. SERIES GENERATOR (OR MOTOR)	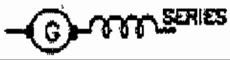
107.	D.C. SHUNT GENERATOR (OR MOTOR)	
108.	D.C. COMPOUND GENERATOR OR MOTOR	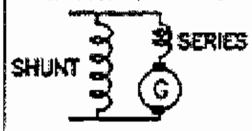
109.	A.C. GENERATOR	
110.	A.C. MOTOR	
111.	SINGLE PHASE ALTERNATOR	
112.	THREE PHASE ALTERNATOR	
113.	STAR CONNECTION	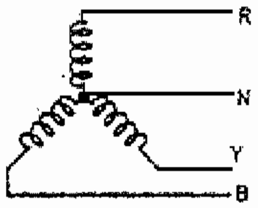

S.No.	ELECTRIAL TERMS	ELECTRIAL (ISI) SYMBOLS.
114.	DELTA CONNECTION	
115.	SINGLE PHASE MOTOR	
116.	THREE PHASE SQUIRREL CAGE INDUCTION MOTOR	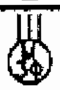
117.	THREE PHASE SLIP RING INDUCTION MOTOR	
118.	ROTARY CONVERTOR	
119.	TRANSFORMER	
120.	TRANSFORMER WITH THREE WINDING	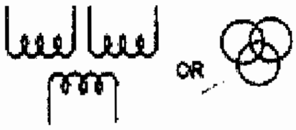
121.	THREE PHASE TRANSFORMER STAR WINDING 66000 / 11000V, 400 KVA 50H_z	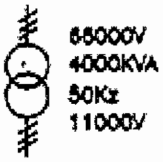
122	AUTO TRANSFORMER	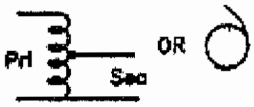
123.	POTENTIAL TRANSFORMER	
124.	CURRENT TRANSFORMER	
125.	SURGE DIVERTER	

S.No.	ELECTRIAL TERMS	ELECTRIAL (ISI) SYMBOLS.
126.	EARTH PLATE	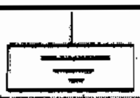
127.	LIGHTING ARRESTER	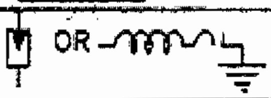
128.	CIRCUIT BREAKER	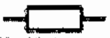
129.	ISOLATOR	
130.	OVER HEAD LINE	
131.	UNDER HEAD LINE	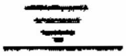
132.	TERMINAL	
133.	STRAIGHT THRUGH CABLE JOINT	
134.	CROSSED WIRE	
135.	SIX CONDUCTORS IN THE SAME WAY	
136.	MOVING COIL INSTRUMENT	
137.	MOVING IRON INSTRUMENT	
138.	VIBRATING REED INSTRUMENT	
139.	D.O.L. STARTER FOR REVERSING MOTOR	
140.	STAR - DELTA STARTER	
141.	AUTO - TRANSFORMER STARTER	
142.	RHEOSTATIC STARTER	

S.No.	ELECTRIAL TERMS	ELECTRIAL (ISI) SYMBOLS.
143.	FAULT	
144.	RECTIFIER	
145.	FULL WAVE RECTIFIER	
146.	AUTO FREQUENCY	
147.	CONTACTOR NORMALLY OPEN	
148.	CONTACTOR NORMALLY CLOSED	
149.	MAIN FUSE BOARD WITHOUT SWITCHES "LIGHTING"	
150.	MAIN FUSE BOARD WITH SWITCHES "LIGHTING"	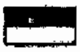
151.	MAIN FUSE BOARD WITHOUT SWITCHES "POWER"	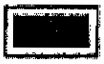
152.	MAIN FUSE BOARD WITH SWITCHES "POWER"	
153.	DISTRIBUTION FUSE BOARD WITHOUT SWITCHES "LIGHTING"	
154.	DISTRIBUTION FUSE BOARD WITHOUT SWITCHES "POWER"	
155.	DISTRIBUTION FUSE BOARD WITH SWITCHES "LIGHTING"	
156.	DISTRIBUTION FUSE BOARD WITH SWITCHES "POWER	
157.	MAIN SWITCH (LIGHT)	
158.	MAIN SWITCH (POWER)	
159.	CHANGE OVER SWITCH	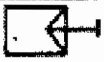

QUESTIONS

Part A

I. One Mark question

1. Draw the Electrical Symbols. Each symbol has one mark.

Part B

II. 4 mark questions

1. Explain Drawing Board.
2. Explain Drawing sheet.
3. Explain Drawing layout.
4. Give a brief note of pencil.
5. Explain Drawing pins, U Clip and Cell tape.
6. Explain Eraser
7. Explain T Square.
8. Explain Set Square.
9. Give a brief notes about scale.
10. Explain Compass.
11. Explain French Curves.
12. Explain Template.
13. Explain Divider.
14. Explain Protractor.
15. Give a brief note of out line.
16. Give a brief note of Dotted line.
17. Give a brief note of centre line.
18. Give a brief note of Dimension line.
19. Give a brief note of Extension line.
20. Give a brief note of section line.
21. Explain pointer line.

22. Explain short break line.

23. Explain Long break line.

Part C

III. 10 mark questions

1. Draw a bisecting line for given straight lime AB length of 80 mm.

2. Draw a bisection line for given straight line PQ length of 150 mm.

3. Draw a perpendicular line to a given straight line AB length of 100 mm from a given point O with in it AO = 40 mm.

4. Divide the given straight line AB length of 120 mm into six equal parts.

5. Divide the given straight line PQ length of 90 mm into are equal parts.

6. Draw an arc of 40 mm radius touching the two given straight lines [AB = 80mm, AC = 70 mm] at right angles to each other.

7. Draw an equilateral triangle ABC for given side. Side AB = 50 mm.

8. Draw an Isosceles Triangle ABC for given data. AB = 60mm, AC = BC=50mm.

9. Draw a scalene triangle PQR for given data. PQ = 80mm, PR = 50mm QR = 70mm.

10. Draw a Right angled triangle ABC for given data AB = 70mm, A = 90°, B = 50°

11. Draw an acute angled triangle ABC for given data. AB=60mm, A =55°, B = 65°.

12. Draw an obtuse angled triangle PQR for given data. PQ=80 mm, P = 100°, Q = 50°

13. Draw a square for given length of one side [Side AB = 50 mm].

14. Draw a square for given length of one side. [Side AB = 70mm].

15. Draw the any ten electrical symbols.

16. Draw a rectangle of length 70 mm and breadth 35 mm.

17. Draw a rectangle of length 85 mm and breadth 40 mm.

Part D

IV. 20 Mark questions

1. Draw a square inscribed in a circle of radius 30 mm.

2. Draw a circle inscribed in a squaer. Length of one side of the square = 50 mm.

3. Draw a pentagon of given side. [Side AB = 25mm].

4. Draw a pentagon of given side. [Side AB = 30 mm].

5. Draw a Hexagon of given side. [Side AB = 30 mm].

6. Draw a Hexagon about a given circle. [Radius of the circle = 30mm]

7. Draw a Heptagon for a given side. [Side = 35 mm].

8. Draw an octagon inscribed in a circle, Radius of 40 mm.

9. Draw an ellipse of major axis 70 mm and minor axis 40 mm in concentric circle method.

10. Draw an ellipse of major axis 100mm and minor axis 60mm in concentric circle method.

11. Draw an ellipse of major axis 90 mm and minor axis 50 mm in trammel method.

12. Draw an ellipse of major axis 80mm and minor axis 40 mm in trammel method.

13. Draw a parabola of base 110 mm and axis 80mm in rectangle method.

14. Draw a parabola of base 85 mm and axis 35 mm in tangent method.

15. Draw a rectangular hyperbola passing through a point P situated at a distance of 60mm and 45mm from AB and AC respectively. AB and AC being the asymptotes.

16. Explain the types of lines of Engineering Drawing?

17. Draw the front view, Top view and side view of given Engineering models.

18. To draw the isometric views of given objects their orthographic views.

19. Draw the D.O.L. starter?

20. Draw the Auto transformer starter?

21. Draw the 3 phase Star - Delta Starter?

22. Draw the slip ring rotor resistance starter?

23. Draw the 3 point starter.

24. Draw the 4 point starter.

25. Draw any 20 electrical symbols?